September 2000
Volume 68 No 9

Amateur Radio

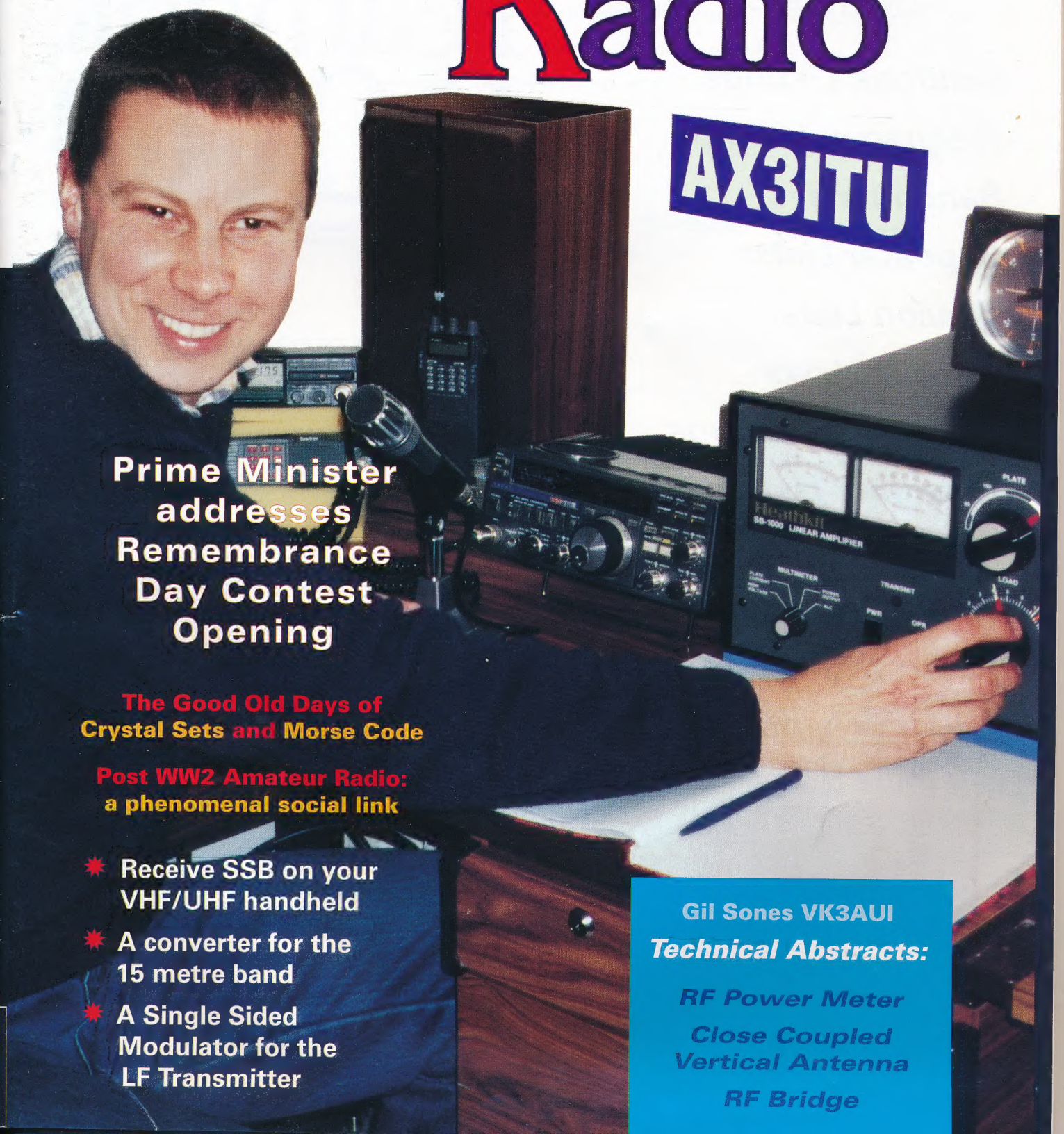

Prime Minister addresses Remembrance Day Contest Opening

The Good Old Days of Crystal Sets and Morse Code

Post WW2 Amateur Radio: a phenomenal social link

- Receive SSB on your VHF/UHF handheld
- A converter for the 15 metre band
- A Single Sided Modulator for the LF Transmitter

Gil Sones VK3AUI

Technical Abstracts:

RF Power Meter

Close Coupled Vertical Antenna

RF Bridge

WIA Yearbook 2000

Callbook Listings
Frequency Listings
Band Plans
Repeater Lists
Beacon Lists
Satellite Lists
Licence Conditions
Examiner Lists
Special Interest Groups
Public Relations Notes
Radio and TV Freqs.
and much, much more!

2000 is a great year to have an up-to-date call book. This YEARBOOK edition contains all of the content you have come to expect of the WIA callbook as well as some new items

It is more than a callbook, it's a Yearbook, the WIA Yearbook!

Watch for the
2001 WIA Call Book
— OUT SOON —

Volume 68
Number 9
September 2000

Amateur Radio

The Journal of the Wireless Institute of Australia

ISSN 0002-6859

Editorial

Editor: Colwyn Low VK5UE
edarmag@chariot.net.au

Technical Editor: Peter Gibson* VK3AZL

Publications Committee Members
Ron Fisher VK3OM
Don Jackson VK3DBB
Evan Jarman VK3ANI
Bill Rice VK3ABP
Gil Sones VK3AUI

Advertising

Mrs June Fox,
Tel: (03) 9528 5962

Hamads

"Hamads" *Newsletters Unlimited*
29 Tanner Street, Richmond VIC 3121
Fax: (03) 9428 4242
e-mail: *newsl@webtime.com.au*

Office

10/229 Balaclava Road
Caulfield, Victoria
Telephone (03) 9528 5962
Facsimile (03) 9523 8191
Business Hours 9:30am to 3:00pm weekdays

Postal

P.O. Box 2175
CAULFIELD JUNCTION
VICTORIA 3161
AUSTRALIA
e-mail: armag@ hotkey.net.au

Production

Newsletters Unlimited (03) 9428 3458

Printer

Streamline Press, Melbourne (03) 9417 2766

Postal Service

IMS (03) 9291 5888

Production Deadlines

Advertising booking and articles for publication 10th of proceeding month.

Hamads and advertising material deadline 18th day of proceeding month

The contents of Amateur Radio are Copyright Wireless Institute of Australia C 2000

Our cover this month
AX3IARU

General

Prime Minister pays tribute: Remembrance Day Contest 3
Jim Linton VK3PC
The Good Old Days of Crystal Sets and Morse Code 12
Bill Rice VK3ABP
Post WW2 Amateur Radio: a phenomenal social link 22
Sid Ward VK2SW
An unwelcome early Christmas present in VK1 24
Gilbert Hughes VK1GH
Does the VK/ZL Contest need a revamp? 40
Tony Burt VK3TZ
He who expecteth little 47
Ian Godsil VK3DID

Technical

Receive SSB on your VHF/UHF handheld 4
Peter Parker VK3YE
A convertor for the 15 metre band 6
Godfrey Williams VK5BGW
A Single Sideband Modulator for the LF Transmitter 10
Lloyd Butler VK5BR
RF Power Meter (Technical Abstracts) 16
Gil Sones VK3AUI
Close Coupled Vertical Antenna (Technical Abstracts) 17
Gil Sones VK3AUI
RF Bridge (Technical Abstracts) 18
Gil Sones VK3AUI
Using Cable TV Hardline (Technical Abstracts) 19
Gil Sones VK3AUI

Columns

Advertisers' Index 55
ALARA 26
ARDF 38
Awards 39
AMSAT 35
Club News 23
WIA Division News
VK1 Notes 30
VK3 Notes 30
VK6 Notes 31
VK7 Notes 31
5/8 Wave 31
DX Notes 32
Editor's Comment 2
Hamads 54
HF Predictions 52
IARU/WIA Monitoring Service 42
New Members 9
Over To You 50
Pounding Brass 48
Repeater Link 46
Silent Key 49, 56
Spotlight on SWLing 27
Technical Abstracts 16
VHF/UHF - An Expanding World 443
WIA Comment 2
WIA Division Directory ..... IBC
WIA Federal Directory 2

Contributions to Amateur Radio
Amateur Radio is a forum for WIA members' amateur radio experiments, experiences opinions and news. Manuscripts with drawings and or photos are always welcome and will be considered for publication. Articles on disc or email are especially welcome. The WIA cannot be responsible for loss or damage to any material. A pamphlet, How to write for Amateur Radio is available from the Federal Office on receipt of a stamped self-addressed envelope.

Back Issues
Back issues are available directly from the WIA Federal Office (until stocks are exhausted, at $4.00 each (including postage within Australia) to members.

Photostat copies
When back issues are no longer available, photocopies of articles are available to members at $2.50 each (plus an additional $2 for each additional issue in which the article appears).

Disclaimer
The opinions expressed in this publication do not necessarily reflect the official view of the WIA and the WIA cannot be held responsible for incorrect information published.

Amateur Radio Service

A radiocommunication service for the purpose of self-training, intercommunication and technical investigation carried out by amateurs; that is, by duly authorised persons interested in radio technique solely with a personal aim and without pecuniary interest.

Wireless Institute of Australia

The world's first and oldest
National Radio Society
Founded 1910

Representing
The Australian Amateur Radio Service

Member of the
International Amateur Radio Union

Registered Federal Office of the WIA
10/229 Balaclava Road
Caulfield North Vic 3161
Tel: (03) 9528 5962 Fax (03) 9523 8191
http://www.wia.org.au

All mail to
PO Box 2175 Caulfield Junction VIC 3161

Business hours: 9.30am-3pm weekdays

Acting Federal Secretary

Peter Naish VK2BPN

Federal Office staff

June Fox Bookkeeper
Rita Trebilco VK3IF Examinations Officer

Council

President	Peter Naish	VK2BPN
VK1 Federal Councillor	Glenn Dunstan	VK1XX
VK2 Federal Councillor	Michael Corbin	VK2YC
VK3 Federal Councillor	Brenda Edmonds	VK3KT
VK4 Federal Councillor	David Jones	VK4OF
VK5 Federal Councillor	David Box	VK5OV
VK6 Federal Councillor	Will McGhie	VK6UU
VK7 Federal Councillor	Phil Corby	VK7ZAX

Executive

Peter Naish VK2BPN
John Loftus VK4EMM

Federal Coordinators

AMSAT	Graham Ratcliff	VK5AGR
ARDF	Jack Bramham	VK3WWW
Awards	John Kelleher	VK3DP
Contests	Ian Godsil	VK3DID
Education	Brenda Edmonds	VK3KT
FTAC	John Martin	VK3KWA
Historian	John Edmonds	VK3AFU
IARU	Grant Willis	VK5ZWI
Intruder Watch	Gordon Loveday	VK4KAL
ITU Conference and study group	Gilbert Hughes	VK1GH
QSL Manager (VK9, VK0)	Neil Penfold	VK6NE
Videotapes	VK2 Division	
Web/PR	Richard Murnance	VK2SKY

ACA Liaison Team

Peter Naish VK2BPN
Glenn Dunstan VK1XX
Michael Corbin VK2YC
Wally Howse VK6KZ
Canberrra Liaison Officer
Richard Jenkins VK1RJ

Editor's Comment

Evan Jarman VK3ANI, Acting Editor

In the dim dark ages while waiting for the department delays between my licence examination and its issuing, I attempted to improve my knowledge of radio by reading. I had just completed a book by the great J A Ratcliffe called *Earth, Sun and Radio*. It was an introduction to the ionosphere. Being a bit of a smart alec, I wrote that I wanted to *Investigate the motor dynamo relationship between electrons in the E and F layers at transequatorial latitudes.* as the reason for getting an amateur licence. It's commonly called the fountain effect.

This obviously struck a chord with the Department: My licence was sent by return post. It was only then that I truly started to learn about the things I had read. To fiddle with radio first hand, make the mistakes, and learn from them is the greatest teaching aid going.

I also joined the WIA.

I have continued to enjoy studying the ionosphere.

Technology has advanced. I think the days of homebrew took a big hit when printed circuit boards became the accepted mode of construction. I could not see any amateur building something like the current equipment. You don't have to. The thrill of talking to someone overseas is now not as great: just pick up a telephone.

In the dim dark ages with all the delays and the requirement to build from components up, it amazes me that people like John Moyle were able to achieve so much. But he was a great man and working at a wide frontier..

Maybe frontiers are not as wide now but there are still things to be done. It is also still a lot of fun. Spectrum that was considered worthless in Moyle's day is being auctioned now for figures that only governments understand.

I am still a member of the WIA; I call it preventative band insurance, with some extra privileges. Sharing the cost of a government interface. While others are not as interested in the bands I use, compared with other bands such as UHF; I share the cost of that voice. That is a principle of insurance. I don't agree with everything the WIA does but I still support the general thrust of my theory of insurance.

I do not understand why others spend thousands on equipment and not seventy on insuring the privileges they need to use that equipment and the enjoyment it can give.

WIA Comment

More of 70 cm under attack

"The ACA has informed the WIA of their intention to licence a fixed radio service for the WA Police Service in the greater Perth area. It is expected that this network will be operational later this year.

The portion of the band to be used is 420-430 MHz. This contains a number of amateur radio services in the Perth area including a television repeater and a number of fixed links. The 70 cms. band is allocated on a Primary basis to the Department of Defence with the amateur radio service as a Secondary user. It is likely that the Police network will be afforded Primary status and that there would a consequential impact on our use of this portion of the band.

The ACA have invited the WIA to meet with them at an early date to consider the impact of this new network on the amateur service and to provide the opportunity for the WIA to provide input to any adjustments that may be required to the amateur radio use of these frequencies.

Clearly the WIA sees any restriction to the access which we currently enjoy in the 70 cms band as a very serious matter. There is concern that the WA Police Network may be only the first of a number of similar systems in other parts of Australia. The WIA will press the ACA for an outcome which provides an acceptable arrangement and which ensures our continued and long term usage of the 70 cm band nationally. The WIA/ACA Liaison Committee is preparing the WIA's position in readiness for the meetings with ACA in Canberra.

Further information will be made available as soon as possible"

Peter Naish.

Remembrance Day Contest

Prime Minister pays tribute

By Jim Linton VK3PC

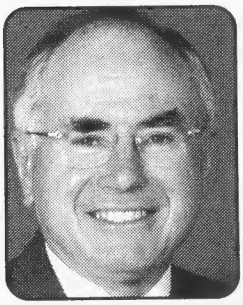

In the opening address to this year's WIA Remembrance Day Contest, the Prime Minister John Howard paid tribute to the WIA members who died in World War II.

Mr. Howard, when approached by the WIA through his Canberra office, readily agreed to provide the opening speech. It was a well-researched address drawing on some historical references supplied to him by the historian of the Department of Veterans Affairs.

In his speech (a full text appears below) he mentions the RAAF Wireless Reserve that existed before War War II to which WIA members belonged, and then enlisted when war was declared providing their technical skills and experience to serve with distinction.

Mr. Howard joins former Prime Ministers, Bob Menzies who gave the opening address in 1958, Gough Whitlam in 1975, and Malcolm Fraser 1976.

Prime Minister's opening address

Fifty five years after hostilities ceased in the South West Pacific it is indeed an honour to present this address to commemorate the sacrifice of amateur radio operators who gave their lives in World War II.

When war and invasion threatened Australia between 1939 and 1945 members of the Wireless Institute of Australia offered their service and their special skills to the nation.

Before the war many had been part of the RAAF Wireless Reserve and these men moved into the wartime air force as wireless operators with the RAAF in Europe, the Middle East and the Pacific.

Twenty six names are listed on the Wireless Institute of Australia's Roll of Honour as having lost their lives to the war and 15 of these men died whilst serving with the RAAF.

Typical here were men like Flight Lieutenant Paul Paterson, who was killed while in action at Rabaul in January 1942, as the enemy struck south into New Guinea, and Flight Sergeant Russell Allen, who died in the skies over Germany in April 1944.

But it was not only the air force, which found a use for the special radio skills, fostered by the Wireless Institute. Norman Gunter was the Radio Officer on the Australian Steamship Company's SS Kowarra when, on the night of 24 April 1943, the ship was torpedoed and sunk as she carried a cargo of sugar from Bowen to Brisbane. Gunter was one of the many who went down with the ship.

Of those military units which served in New Guinea and the islands, one that was highly regarded for its particularly hazardous and vital work behind enemy lines was 'M' Special Unit - the coastwatchers. Lieutenant David Laws was one such coastwatcher who, whilst serving in May 1943 as a radio technician, was killed when he accompanied a group observing enemy activity on the coast east of Madang.

We honour each of these men as we honour others who lost their lives to the war through their service in radio. They are part of a proud Australian military tradition, that has never sought to impose its will upon the world, but only to defend what is right – a tradition I have honoured as far way at Anzac Cove and the Somme; and as close by as with Australian troops in East Timor.

We remember, too, the service of amateur radio operators at times of natural disaster - the bushfires of Black Friday and Ash Wednesday as well as through the winds of Cyclone Tracy.

I am pleased to acknowledge your continued efforts and recognise your work throughout Australia, New Zealand and Papua New Guinea.

In this vein I declare open the Remembrance Day Contest for 2000.

Remembrance Day Contest Honor Roll of WIA members who paid the supreme sacrifice

Royal Australian Navy

J.E. Mann VK3IE A.H.G. Rippon VK6GR

Australian Military Forces

C.D. Roberts VK2JV J.D. Morris VK3DQ J. McCandlish VK3HN S.W. Jones VK3SF

D.A. Laws VK4DR J.G. Phillips VK5BW K.S. Anderson VK6KS

Royal Australian Air Force

F.W.S. Easton VK2BQ V.J.E. Jarvis VK2VJ W. Abbott VK2YK G.C. Curle VK2AJB

T. Stephens VK3GO M.D. Orr VK3OR J.F. Colthrop VK3PL J.A. Burrage VK3UW

J.E. Snadden VK3VE F.J. Starr VK4FS R. Allen VK4PR C.A. Ives VK5AF B. James VK5BL

J.E. Goddard VK6JG P.P. Paterson VK6PP

Merchant Marine

N.E. Gunter VK3NG R.P. Veall VK3PV

"They shall grow not old as we that are left grow old. Age will not weary them nor the years condemn. At the going down of the sun and in the morning, we will remember them."

ar

Receive SSB on your VHF/UHF handheld

Peter Parker VK3YE
12/8 Walnut Street, Carnegie, Vic, 3163
Email: parkerp@alphalink.com.au

Photo 1: The Yaesu VX-5R transceiver used in the experiments.

The average VHF/UHF handheld transceiver no longer just receives the amateur bands. Coverage of VHF, UHF and even HF frequencies is now offered in smaller and smaller packages.

An example of trends in modern handheld amateur equipment is the Yaesu VX-5R, which was released last year. It transmits on six metres, two metres and 70 centimetres. Reception is provided on 0.5 to 16 MHz and 48 to 999 MHz. Modes available include narrow FM (as used by amateurs, police and taxis), wide FM (as used by TV and FM radio stations) and AM.

This is well and good for VHF/UHF scanning and broadcast reception, but what about HF amateur activity, most of which is CW and SSB? Is it possible to receive these signals on a standard, unmodified VX-5R? As will be demonstrated by the following experiments, the answer is yes. The performance will not cause you to throw away your HF rig or communications receiver, but it's surprisingly good, and quite adequate for casual use.

The remainder of this article describes the author's experiments with the VX-5R as an SSB receiver on several amateur bands between 3.5 and 432 MHz. No modifications are required as use is made of an outboard beat frequency oscillator (BFO) at signal frequency. The BFO recreates the carrier signal in the receiver that has been suppressed in the SSB transmitter.

Equipment needed

All that is needed for the BFO is an RF signal generator or oscillator that will generate an unmodulated carrier signal at the received frequency. If this cannot be achieved, an oscillator with an output that is a submultiple of the desired frequency will suffice.

The BFO should be housed in a solid enclosure and have an output level that can be varied. Band spread should be sufficient to make the fine adjustments required to adequately resolve SSB signals. Examples of suitable BFOs include an RF signal generator, HF transceiver operating into a dummy load, a properly constructed home made free-running VFO or a variable oscillator made from a 3.58 MHz ceramic resonator. A dip oscillator will work in a pinch, but stability, ease of tuning and ability to control output will be poor.

Using signal frequency BFOs

Using an AM receiver with an adjustable BFO at signal frequency is slightly different to tuning a conventional receiver. The simplest analogy, understandable to those who have used older receivers, is to regard the receiver's tuning control as a preselector (or front-end peak) control and the BFO adjustment as the main tuning control. Because the critical tuning is done by the BFO, the quality of the BFO tuning mechanism greatly affects the useability of this arrangement.

To tune signals, set the rig to AM in the VFO mode. Set the frequency steps to 5 kHz. Because of the VX-5's broad AM receive bandwidth, and the fact that the final tuning is done by adjusting the BFO, signals do not have to be exactly on the VX-5's indicated frequency to be properly resolved.

It is sometimes desirable to adjust the strength of the BFO signal. Very strong signals require more BFO injection than weaker signals. On 20 metres, the best BFO level for tuning around was between two and five bars on the VX-5's S-meter. There is no need to un-mute the receiver – the signal from the BFO should be sufficient to open the squelch at all times.

Receiving HF SSB signals

Reception experiments were performed on 80, 40 and 20 metres. The antenna was a 3.5 MHz half-wave dipole with open wire feeders. This was connected to the VX-5's antenna socket via an antenna coupler. The first tests were with a homebrew dip oscillator (pictured in August's *Novice Notes*) as BFO. SSB and CW could be resolved, but tuning was critical. Also controlling of the oscillator's injection level meant moving the dip oscillator towards and away from the transceiver.

Using a Yaesu FT-301S transceiver (switched to transmit carrier) fed into an unshielded 50 ohm dummy load provided much better results. This was because of the easier tuning, better frequency stability and control over output level. Reception of SSB and CW signals was excellent on all three bands. Europeans and Americans stations were easily heard on 20 metres.

The main shortcoming of the system was selectivity – it was difficult to hear a weak signal within 5 kHz of a strong nearby station given the receiver's 15kHz-plus selectivity. However, in practice, even this problem was not as limiting as it sounds, especially if the set will mainly be used for local reception on 80 and 40 metres, which are less crowded than 20 metres. Outboard audio filters would also assist, particularly for CW.

Another potential problem is that like all handheld transceivers, the VX-5R is designed to be sensitive with its standard whip antenna. The need for sensitivity means a receive mixer weaker than in standard HF transceivers. However, even on 20 metres, no mixer overload problems were experienced during the experiment.

General performance of the VX-5R/BFO combination as an HF receiver was better than expected. It would certainly rival many homebrew direct conversion receivers. The system is fully adequate for the casual listener, and would even be good enough for less rigorous communications purposes. Its use in combination with a homebrew QRP CW or DSB transmitter (VFO running continuously to double as receiver BFO), would make for a low-cost ultra-small transceiver package capable of HF, VHF and UHF operation.

Receiving UHF SSB signals

The next experiment performed was to receive SSB signals on 70cm on the VX-5R. The 432.300 MHz vertical polarisation SSB net held in Melbourne each Monday (9:00pm local) was a good opportunity to test the technique.

Because the BFO must operate at signal frequency, extreme stability is required for 70cm SSB reception. It has been shown that a 100 Hz drift is sufficient to cause a significant loss of readability on a weak SSB signal. This corresponds to a stability within 0.3 parts per million on 432 MHz. The homebrew dip oscillator was clearly insufficiently stable for this experiment.

Instead it was decided to use the fifteenth harmonic of the FT-301S set to 28.8 MHz as the BFO. The HF transceiver's dummy load was placed about 20cm from the VX-5R.

A half-wave whip on the VX-5R was used as the 70cm receive antenna. The set was tuned to the desired frequency in the AM mode. The HF transceiver was keyed and the VFO adjusted until the harmonic is heard in the handheld transceiver (28.820 MHz for 432.300 MHz). Careful movement of the HF transceiver's tuning knob resulted in SSB signals becoming intelligible.

Weaker signals will require less BFO injection than stronger signals. For this reason a variable output BFO is desirable. The FT-301's Tune control performed this function effectively in the tests described – detuning caused a rapid (and easily controlled) drop in output level. Users of broadband rigs will have to be satisfied with varying the RF power control or moving the dummy load further away from the handheld.

SSB signals from local operators within 5-10km were easily heard in the receiver on the indoor whip antenna. A station approximately 25km could also be faintly heard. This signal became almost readable when the BFO signal was made stronger and the handheld taken outside (about 2-3 metres from the dummy load). Given that the station was about 5/4 when using a proper SSB transceiver and outside vertical antenna on two metres, this result is acceptable. Ease of tuning, though not as good as most experience on HF, was surprisingly good. Drift was noticeable, but only for long transmissions, where retuning every couple of minutes was desirable. No doubt the use of more modern HF transceivers with PLL frequency synthesisers and slower VFO tuning rates will yield improvements in this area.

Tests were not conducted on two metres SSB, but it expected that the results would be better than on 70cm due to less BFO drift and easier tuning. As with HF, the technique lends itself to use with a companion DSB or CW transmitter/BFO, possibly using a VXO and multiplier chain to generate the required signal.

Conclusion

A simple technique has been described that will allow owners of handheld transceivers and scanners to receive SSB and CW signals. With a good BFO, performance is adequate for most general purpose SSB/CW listening, especially on HF. It is hoped that this method will open a new world of listening to people with modern portable receivers that mostly lack SSB capabilities. For the QRP portable operator, the system could also be adopted to form a multi-band station that is smaller and draws less power than any other combination available today.

ar

Radio Theory Classes for Prospective Novice and Full Call Amateur Operators are currently available.
These classes can lead to a nationally recognised Certificate I in Electrotechnology

Radio Theory Classes

The courses are delivered by a professional training organisation by
- Classroom participation
- Correspondence (paper based)
- Internet (on line)

Cost $290 per person inc GST

Contact Rachel
Ph: (03) 9417 0700 Fax (03) 9417 0221
Email: rachel@silvertrain.com.au
248 Johnston St Abbotsford, Vic 3067

Radio Theory Handbook 3rd ed. by Fred Swainston is available $60.45 inc GST

SILVERDALE TRAINSAFE

A convertor for the 15 metre band

Godfrey Williams VK5BGW
14 Jenolan Cresc.,
Hillbank S.A. 5112

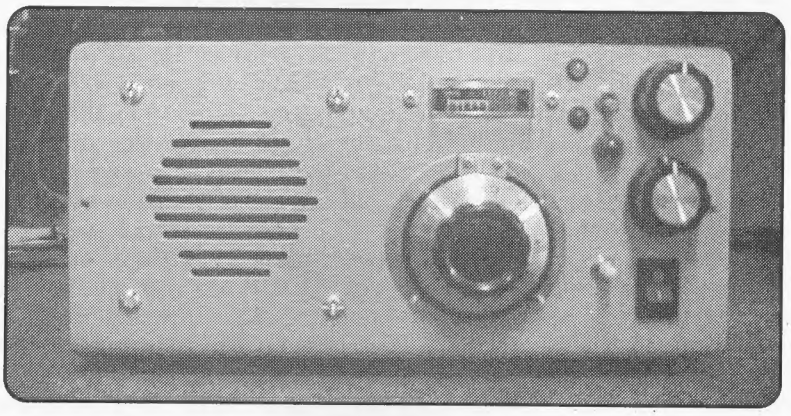

Photo 2

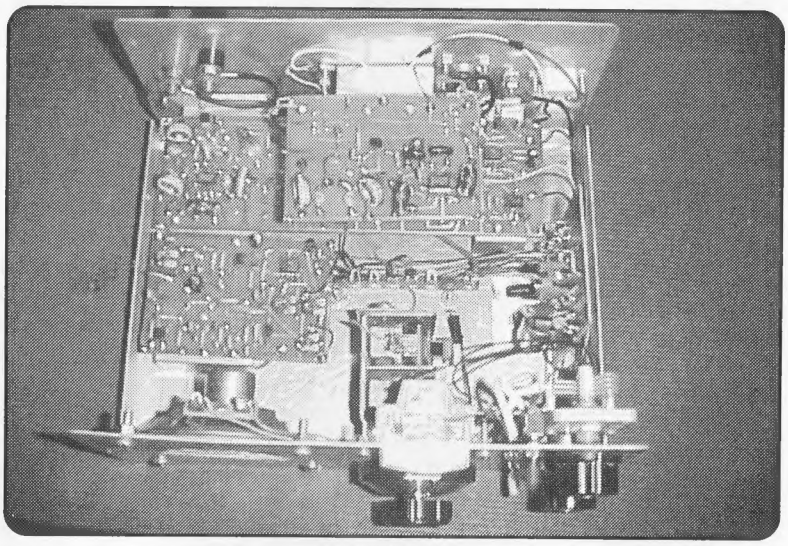

Photo 1

This convertor circuit is an add on to the 20 metre upper sideband receiver I described in the April 2000 edition of Amateur Radio. It allows reception in the 15 metre band. Switching between the 15 and 20 metre bands is via two miniature relays that are energized by a simple toggle switch. A NE602 integrated circuit is employed as the mixer its internal transistor being used to form a Colpitts crystal oscillator.

Circuit operation

With both relays inactive the antenna is connected straight through to the input of the main board allowing reception in the 20 metre band. When 12 volt is applied to the convertor board via the bandswitch both relays are energized and 5 volts is applied to the NE602 device via T1 the voltage regulator. Now the antenna is connected via RL1 to the convertor board input and the output connected via RL2 to the input of the main board.

L1 and L2 plus their associated capacitors form a 50 Ohm bandpass filter accepting signals in the 15 metre band. The result is presented to pins 1 and 2 of the NE602 mixer via L3 which provides a balanced input, 21 MHz signals are then mixed with the 7 MHz oscillator the difference signal being 14 MHz which is routed via L4, C7 and RL2 to the main board. We now have a dual conversion receiver with a tunable first intermediate frequency i.e. 14 to 14.350 MHz that will relate directly to 21 to 21.350 MHz, there is no sideband inversion, upper sideband remains as upper sideband. L4 provides a balanced output for the mixer and R4 helps to reduce the noise floor on 15 metres plus normalizing the input of the main board.

Continued on page 10

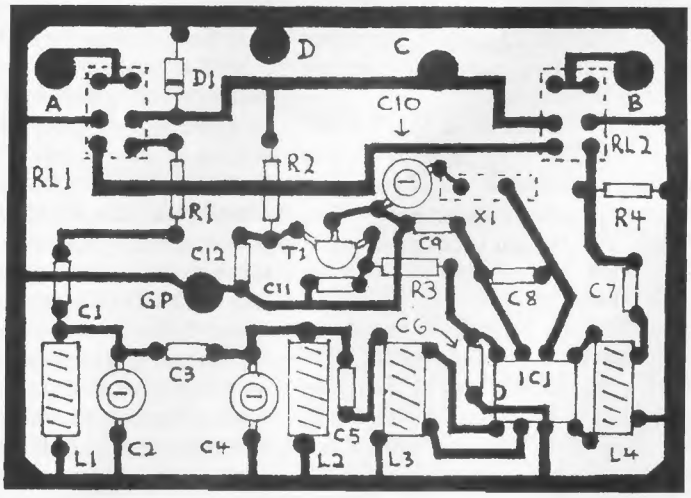

Figure 1: PC Board Actual Size

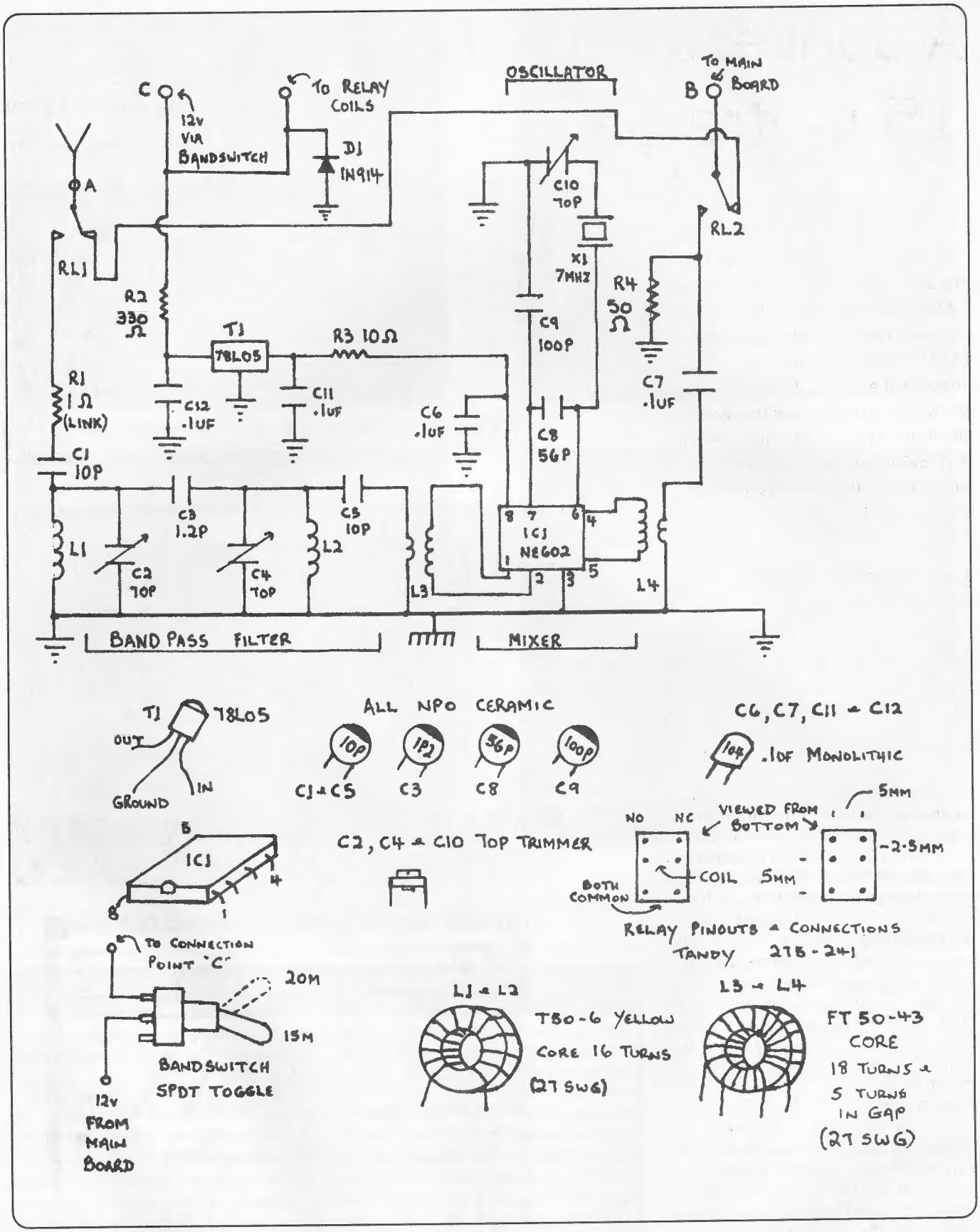

Figure 2: Circuit and components

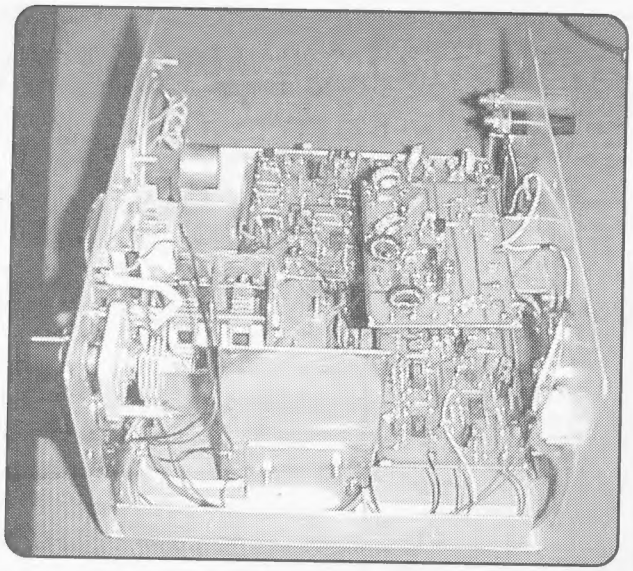

Photo 3

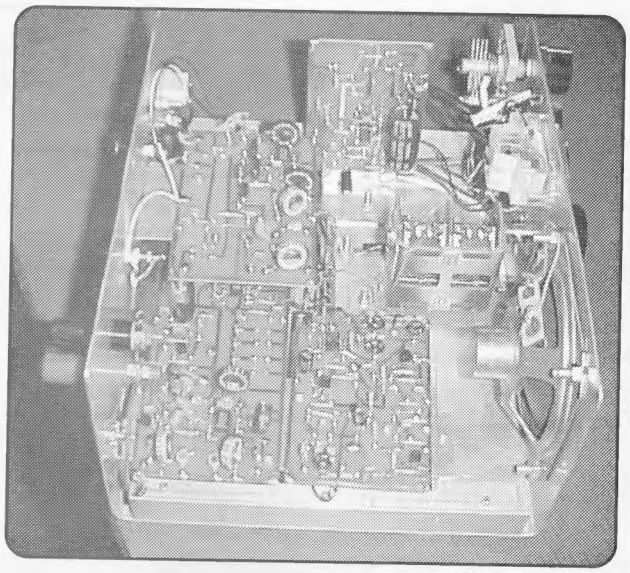

Photo 4

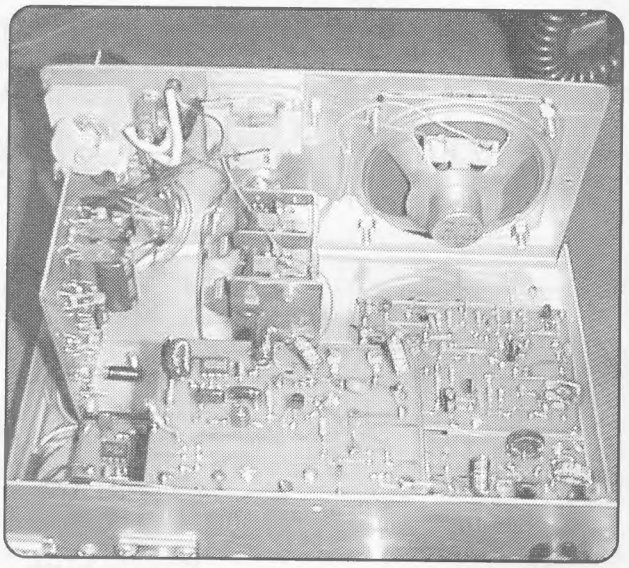

Photo 5

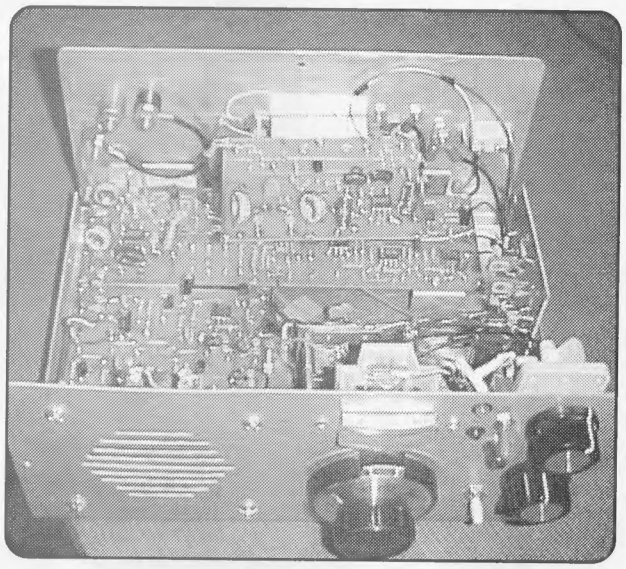

Photo 6

Continued from page 8

Construction

The printed circuit board is cut from a piece of double-sided copper clad board, one side being used as a groundplane. This side is painted so that it survives the etching process, then the trackside of the board is thoroughly cleaned and allowed to dry.

Referring to the layout shown draw the tracks and pads with a direct etch pen, later when the ink is dry the board is etched in a warm solution of ammonium persulphate. Make sure that the etching process is a complete, any fine whisker or smears of copper remaining will short out the tracks and pads. Each corner of the board and the pad marked GP need to be drilled through to allow a connection to be soldered through to the groundplane side

The two relays and the crystal are mounted on the groundplane side of the board so holes will have to be drilled for these, remember to remove on the groundplane side the copper around these holes using a small drillbit. The remaining components are soldered onto the trackside of the board, mount the capacitors as close as practical but allow the four resistors to sit a little higher to clear any tracks underneath. R1 is used purely as a link and may be replaced with a wire link if so desired.

The four inductors are wound using 27 SWG enameled copper wire, L1/L2 using a T50-6 (yellow core) have 16 evenly spaced turns, L3 and L4 using a FT50-43 core with an 18 turn closely spaced winding and a 5 turn winding wound in the gap. L3 uses the smaller winding as its primary and L4 uses the smaller winding as its secondary (refer to the circuit diagram)

The connection pads on the convertor board are identified with an alphanumeric letter and are as follows.

A. To the antenna.

B. To connection point A on the main board.

C. 12 volts via the bandswitch

D. Ground and chassis.

Connect A on the convertor board to the antenna terminal and B to the input of the main board. Wire up the bandswitch as shown in figure 2. Give the convertor board its own chassis connection and mount the board so that there is some shielding between it and the main board.

Commissioning

Trimmer capacitor C10 is adjusted to give 7 MHz at pin 7 of IC1. With the AGC switched off trimmer capacitors C2 and C4 are adjusted for maximum band noise. The peak is easily perceived and occurs when both trimmers are approximately half meshed. In order to receive the full 450 kHz of the 15 metre band, the VFO on the main board will have to be expanded so that its range is from 6 to 6.450 MHz, so capacitor CS on the main board will have to be increased in value

Performance

The 7 MHz oscillator produces a strong carrier just under the lower band edge of 15 metres being a product of the second and third harmonics otherwise the convertor performs quite nicely, the extra gain produced by having two active mixers during 15 metre operation lifts the noise floor of the receiver hence the inclusion of resistor R4.

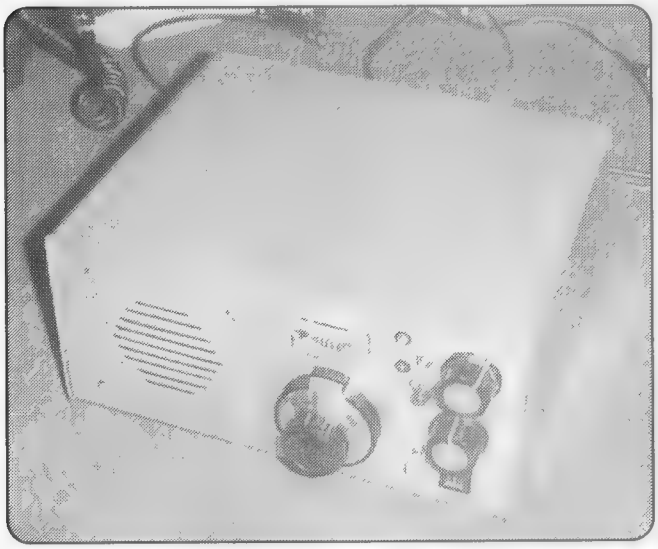

Photo 7

PARTS LIST

Resistors.

R1 1 Ohm(link)
R2 330 Ohm.
R3 10 Ohm.
R4 50 Ohm.
All quarter watt carbon.

Capacitors.

C1 and C5 10 pf NPO ceramic.
C3 1.2 pf NPO ceramic.
C2,C4 and C10 70 pf trimmer capacitors.
C8 56 pf NPO ceramic.
C9 100 pf NPO ceramic.
C6, C7, C11 and C12 0.1 uf monolithic capacitor.

Semiconductors

T1 78L05 5 volt regulator
IC1 NE 602 OR SA 602 integrated circuit
D1 IN914 diode

Inductors. (See text and figure 2)

Misc

7 MHz crystal
Toggle switch SPDT
Two miniature 12 volt relays (Tandy part no. 275-241)
Direct etch pen (Dick Smith part no. N5181)
Ammonium persulphate etchant (Dick Smith part no. N5654)

New WIA Members

The WIA bids a warm welcome to the following new members who were entered into the WIA Membership Register during the month of JULY 2000

AP2MY	MR YUNUS CHAUDHRY	VK3JKA	MR R HIGGINS
L21180	MR A J JENNER	VK3JMA	MR M AITKEN
L31554	MR M ADAMS	VK3JRF	MR R FREE
VK2ATO	MR J D THORNTHWAITE	VK3TZD	MR E BENNIER
VK2DDX	MR L P Z TAA	VK3ZAI	MR A ISAACS
VK2JAC	MR G ATHANASSIOU	VK3ZBN	MR B NEVE
VK2TQP	MR W M BAKER	VK5WK	MR G R PRINCE
VK2YDH	MR D C HARDY	VK5ZAZ	MR C L PRICE
VK3JEM	MR L SNIBSON	VK6KDC	MR D CHURCH

Andrews
Communications Systems
(EST.1976 - ACN 001 968 752)
ALINCO
AUSTRALIA'S FIRST AUTHORISED FACTORY DIRECT IMPORTER
MASSIVE SHIPMENTS EVERY MONTH
FULL 3-YEAR WARRANTY ON
ALINCO and ICOM
WE SELL MOST BRANDS
BALUNS, VERTICALS, YAGIS, P/S.
ICOM-KENWOOD-JRC-AOR-EMOTATOR-MFJ-DIAMOND-TIMEWAVE-KANTRONICS -THP - GARMIN - TERLIN - UNIDEN -ETC
DX-1600 HF LINEARS FROM $ 3,799
HUGE RANGE OF ELECTRONICS, ICOM and ALINCO Radios.
Over 22 Years of Professional Sales and Service.
Instant Repairs Fridays
HF Transceivers & Linears Wanted
(02) 9636 9060 or (02) 9688 4301
SHOP 8, 41 BATHURST ST, GREYSTANES, N.S.W. 2145. FAX (02) 9688 1995

A Single Sideband Modulator for the LF Transmitter

(The Phasing System of SSB revisited)

Lloyd Butler VK5BR

The February, 2000 issue of *Amateur Radio* included my article on *An Experimental Low Frequency Transmitter (ref. 1)*. The article was published in anticipation of the approval of a new amateur band in the LF region. At the time of preparing this article which follows, approval was still being sought. There was also the question that if such a band was approved, would it allow some mode of speech transmission?

In anticipation of a need for speech operation, I decided I would design a speech modulator for the already built LF transmitter. With the limited band space available in a band in this part of the radio spectrum, a single sideband (SSB) system seemed preferable to the wider bandwidth AM system. So this is what I have built and what I am about to describe.

The simplest way to produce SSB for the LF transmitter might have been to heterodyne down the RF output of the amateur station HF transceiver. However this might have put some limitations on the utility of the LF equipment for use at a unique site away from the amateur station and I decided to build a stand alone modulator which could connect into the LF transmitter.

These days, most SSB transmitters use the filter method where double sideband is produced with carrier balanced out and one sideband rejected by feeding the other through a steep skirted bandpass filter. The filter is fixed in frequency and frequency transmitted is derived by a heterodyne process. The filter is normally centred in the HF region and the usual amateur method to make such a filter is to use a ladder network with quartz crystals of the same frequency. For application with the LF transmitter, the fixed frequency SSB signal, could be heterodyned down to the required low frequency.

An alternative method of producing a single sideband is the phasing system. For this system, there are two modulators which balance out the carrier signal fed to them. The carrier to one is fed 90 degrees out of phase to the other. Audio signal generated by speech is fed to both modulators, the signal fed to one being 90 degrees out of phase with the other over the whole speech frequency range. Balancing out of one sideband using this system can be illustrated with the aid of vector diagrams. A description making use of these diagrams, as given in the RSGB

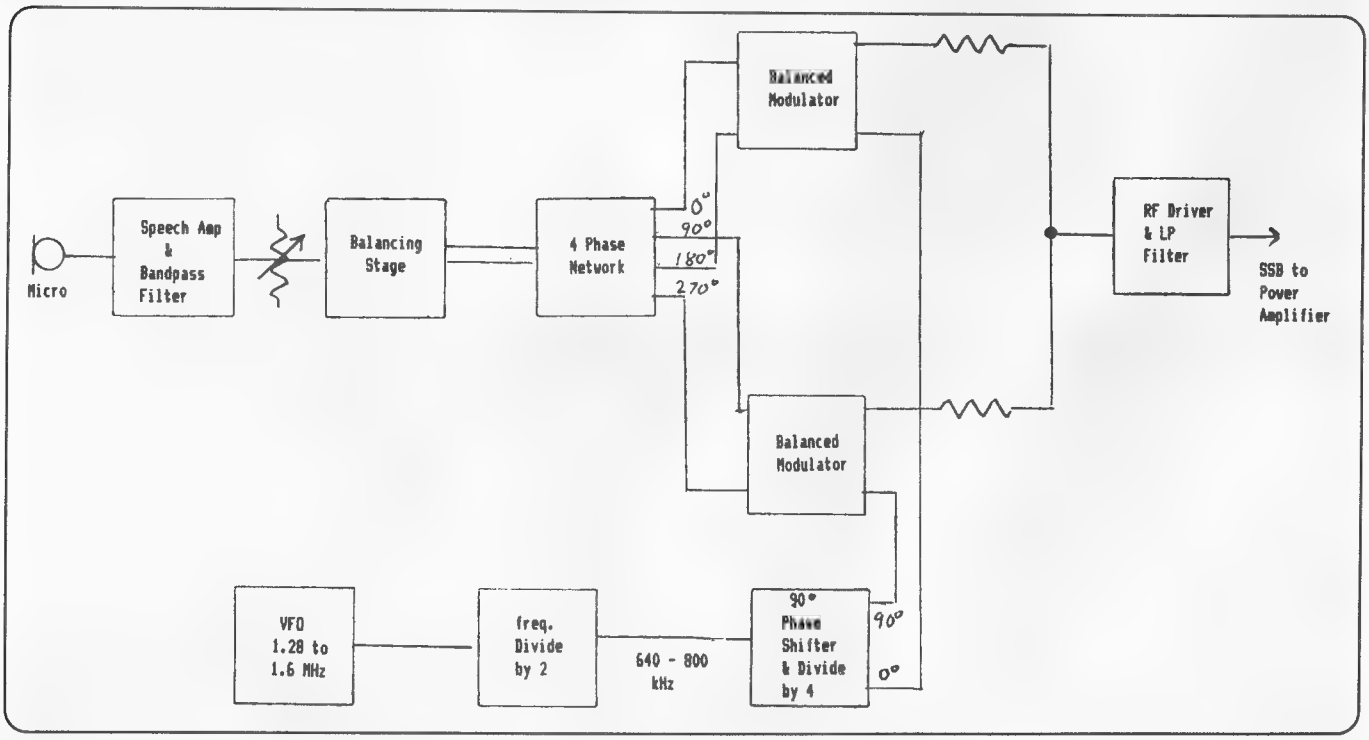

Figure 1: Single Sideband Modulator — Schematic

Radio Communication Handbook, is included in an appendix at the end of this article.

One feature of the phasing system is that it can be made to operate over a wide range of frequencies without any tuned circuits, selective frequency circuits or heterodyning. For the LF transmitter, this system provided some attraction as the whole process could be done at the LF baseband and cover the whole transmitter frequency range of 160 to 200 kHz without any selective frequency elements.

It seems that the phasing system might have lost favour because of difficulties in making a satisfactory audio phase shift network. Whilst a 90 degrees phase shift can easily be achieved at a single radio frequency, it is somewhat more difficult to maintain a constant 90 degrees phase shift over the whole speech frequency spectrum. Some networks used for the audio phase shift have required high precision components and this has discouraged assembly by radio amateurs. Because of this, my first job was try out an audio phase shift network. As it turned out, this proved to be no problem. Furthermore, I had previously experimented with crystal ladder filters as used in the filter type system (Ref. 2) and my conclusion was that it was simpler to get operating the audio phase shift network in the phasing type system than the ladder filter in the filter type system. Also because of the quartz crystals, the component cost of the ladder filter was greater. With this in mind and with consideration of the advantages discussed in the previous paragraph, I decided to build the modulator around the phasing system and the arrangement figure 1 evolved.

The Audio Phase Shift Network

The circuit of the audio phase shift network used is shown in figure 2. This is a design published in issues of both the ARRL Handbook and the RSGB Radio Communication Handbook and is referred to as the *polyphase network* by RSGB. Acknowledgement of design is given to M.J.Gingell by RSGB and HA5WH by ARRL. It requires 24 resistors of the same value and 6 different value groups of capacitors, each capacitor in its group the same. This is a lot of resistors and capacitors but according to the documentation, ordinary 10% tolerance components can be used to achieve constant phase shift over the speech range of 300 to 3000 hertz , with a performance of 60 dB of opposite sideband attenuation.

The network is fed from a low impedance balanced source and gives a four phase output of 0, 90, 180, & 270 degrees. From this, two outputs, 90 degrees apart, can be either balanced or unbalanced.

Despite the large number of components, it didn't take me long to assemble them on a piece of matrix board just as they are laid out in the circuit diagram. I put in a matrix pin for

Continued on page 15

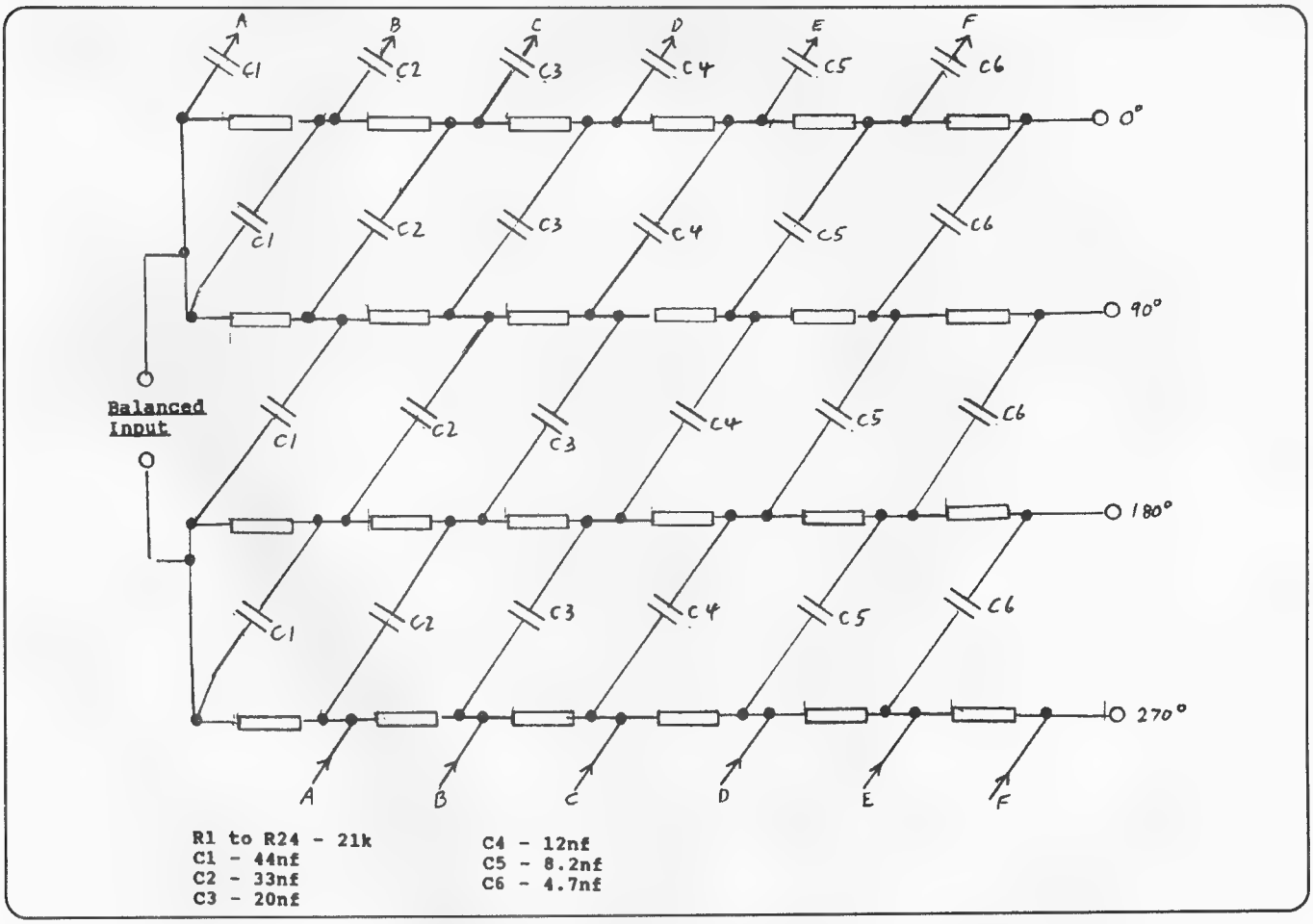

Figure 2: Audio Polyphase (4 Phase) Network

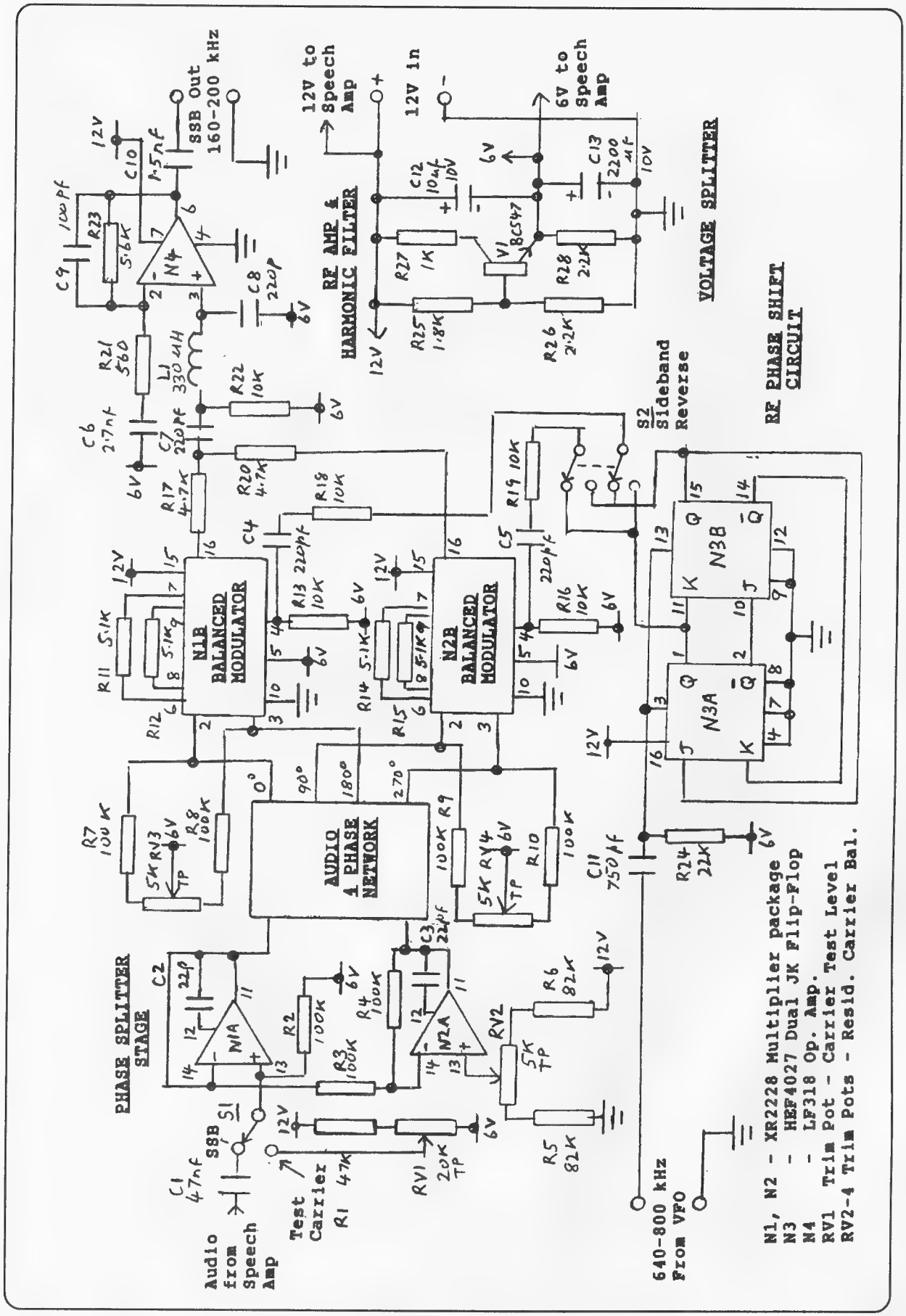

Figure 3: Single Sideband Modulator, General Circuit Diagram

Continued from page 13
each component junction and soldered the components in. Checking it out over the speech frequency range is simple. An audio oscillator is fed to the input via a balancing transformer. The outputs are checked for correct phasing and equal amplitude using any two of the outputs fed to the two Y inputs of a dual trace CRO. Phasing can be carefully scaled using the CRO graticule. For a single trace, one output can be fed to the X amplifier and the other to the Y amplifier to form a vector trace.

As far as I was concerned, I just wired the right value components in and it all just worked like a charm. So the audio phase shift network was no real problem.

The Single Sideband System

A Block diagram of the single sideband system is shown in figure 1. Circuit detail is shown in figure 3. The main elements of the system are a speech amplifier, the audio phase shift network with balanced driver circuit (N1A,N2A), two balanced modulator stages (N1B & N2B), an RF carrier phase shift circuit (N3) and an output RF driver stage incorporating a lowpass filter (N4).

A number of different well known integrated circuit packages such as the MC1496, NE602 and the SL1640 could have been used as balanced modulators. However I happened to have a number of XR2228 Monolithic Multiplier packages and two of these (N1 & N2) are used for these functions. These devices have balanced X and Y input circuits, a balanced output and a circuit arrangement which looked ideal for a balanced modulator. They can also handle frequencies up to around 3 MHz , well above our LF range.

The XR2228 packages also include an operational amplifier each (N1A & N1B) and the pair of these are used to form a balanced low impedance driver for the audio phase network. The amplifier outputs are directly coupled through the network to the X inputs of the balanced modulator sections of the packages (N1B & N2B). Precise DC balance of the complete circuit (necessary to set to for best carrier rejection) is set by trimpot RV2. In retrospect, my thoughts are that it might have been better to use a separate op amp package for the driver as the arrangement resulted in the concentration of a lot of components around the two XR2228 units.

Concerning residual carrier balance, a later addition was the inclusion of trimpots RV3 and RV4 which allow individual adjustment balance of the two balanced modulators and further improvement in the rejection of residual carrier.

A 90 degree phase shift for one of the RF carriers can easily be achieved with simple reactive circuits but this system is somewhat confined to a single frequency. Instead, a circuit using two type D or JK flip-flops can provide two outputs 90 degrees apart for any frequency the flip-flops can handle. For this function, LOCMOS dual JK flip-flop type HEF4027 (N3) has been used. One characteristic of the circuit is that it requires a drive frequency four times the carrier frequency so that for the 160 to 200 kHz transmitter, we need 640 to 800 kHz drive from the VFO. Change between upper and lower sideband is simply achieved by reversing the output leads from N3 which feed the two balanced modulators. Switch S2 is provided for this purpose.

The outputs from the two balanced modulators are combined at the junction of R17 and R20. The single sideband output is insufficient to drive the input of the transmitter and amplifier N4 raises the output level by a factor of 10. The output from the modulators contains higher order frequency components and L1-C8 and R23 -C9 provide a frequency roll-off above 200 kHz to attenuate these components. This is are the only frequency dependent section of the SSB system, limiting operation much above 200 kHz.. Higher order frequency components are further attenuated in the low-pass filter at the output of the transmitter.

As a matter of interest I did carry out some limited tests to see how high a frequency the system could be made to work. (Of course not including the output filters just discussed). I found I could generate single sideband at frequencies as high as 3.5 MHz, limited probably by the characteristics of the XR2228 packages. I suspect the modulators could be made to go higher using packages such as the NE602. Further to that, higher frequencies could be achieved by heterodyning.

The circuit can be switched from SSB to constant carrier for testing or for CW mode by operating switch S1. It achieves this by unbalancing the modulators to allow carrier to get through. The level of carrier is determined by the degree of unbalance set by trim-pot RV1. The switch also disconnects the speech amplifier so that modulation cannot take place. Whilst I haven't allowed for it in the switching, it is only a matter of shorting out this part of the switch to allow the speech signal to reach the modulators with the carrier on and we generate amplitude modulation.

The Speech Amplifier

The speech amplifier is shown in figure 4. It uses two amplifier stages to raise the speech level from the microphone sufficient to drive the input of N1A in figure 3. Its overall voltage gain is close to 2000. The output level is set by potentiometer RV5 which is mounted as a front panel control of the modulation level. Input sensitivity is suitable for a typical dynamic microphone.

The amplifier also includes second order components to achieve a frequency roll off below 300 Hz and above 3000 Hz. This inclusion of some attenuation outside the normal speech range seemed desirable as the audio phase shift network is designed for constant phase difference between its outputs only over the 300 to 3000 Hz range. If any speech components outside this frequency range pass through the network, the phase relationships could be different which could cause generation of opposite sideband.

A popular choice of an amplifier package for the speech amp would have been the uA747 dual op amp. However I have accumulated a multitude of type LM349M which have four amplifiers in the one package. The only reason I instead selected the LM349 for this circuit is that I thought I had better start making some use of these.

The input connection for a microphone is a tip/ring/sleeve stereo type socket which is my standard for microphones in my shack. The tip is wired to a terminal outlet for use as Push-to-talk (PTT) if required later for receive/transmit control.

Power Rails

The modulator circuitry (figure 3) and the speech amplifier circuitry (figure 4) are operated from 12v derived in the transmitter unit and initially provided just for the VFO. A further rail of 6V is

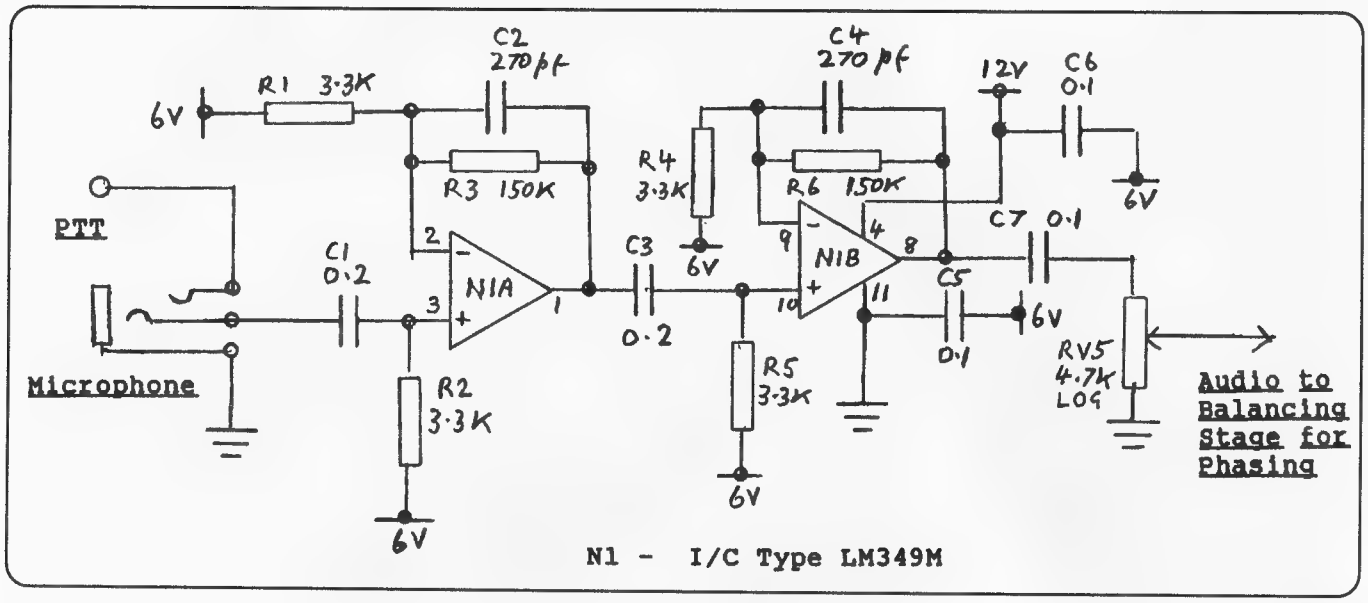

Figure 4: Speech Amplifier

derived by V1 circuit in figure 3 to provide a centre voltage which sets the operating points in the various circuits.

The Variable Frequency Oscillator (VFO)

The VFO is described in my previous article on the transmitter. It initially operated at 10 times the transmitted Low Frequency but this was later changed to 8 times. Some time had elapsed between when the transmitter was built and when I decided write about it in AR. I had forgotten about the change and wrote it up in the article as 10 times. However if one carefully examines the divider circuit following the VFO, as published, it is clearly a divide by 8 circuit. My apologies for that error.

Because the RF phase shift circuit in the sideband unit uses an RF drive signal 4 times the suppressed carrier frequency, an output from the VFO is now required at only half the VFO frequency. The original HEF4017 counter was replaced with a HEF4024 counter which was connected to give two outputs, one divide by 2 and the other divide by 8, the latter of which was fed through the existing sine shaping filter. The circuit detail is shown in figure 5. If the new SSB unit is used, the divide by 2 output is connected into RF phase shift flip-flop circuitry input in the modulator. If it is desired to operate the transmitter in its original CW mode and discard the modulator unit, the divide by 8 sine wave output at 160 to 200 kHz can be directly wired to the transmitter power amplifier input.

Alternatively, to operate CW when the modulator is left connected in circuit, switch S1 (figure 3) is operated to generate the 160 to 200 kHz signal fed to the transmitter via the unbalanced modulators.

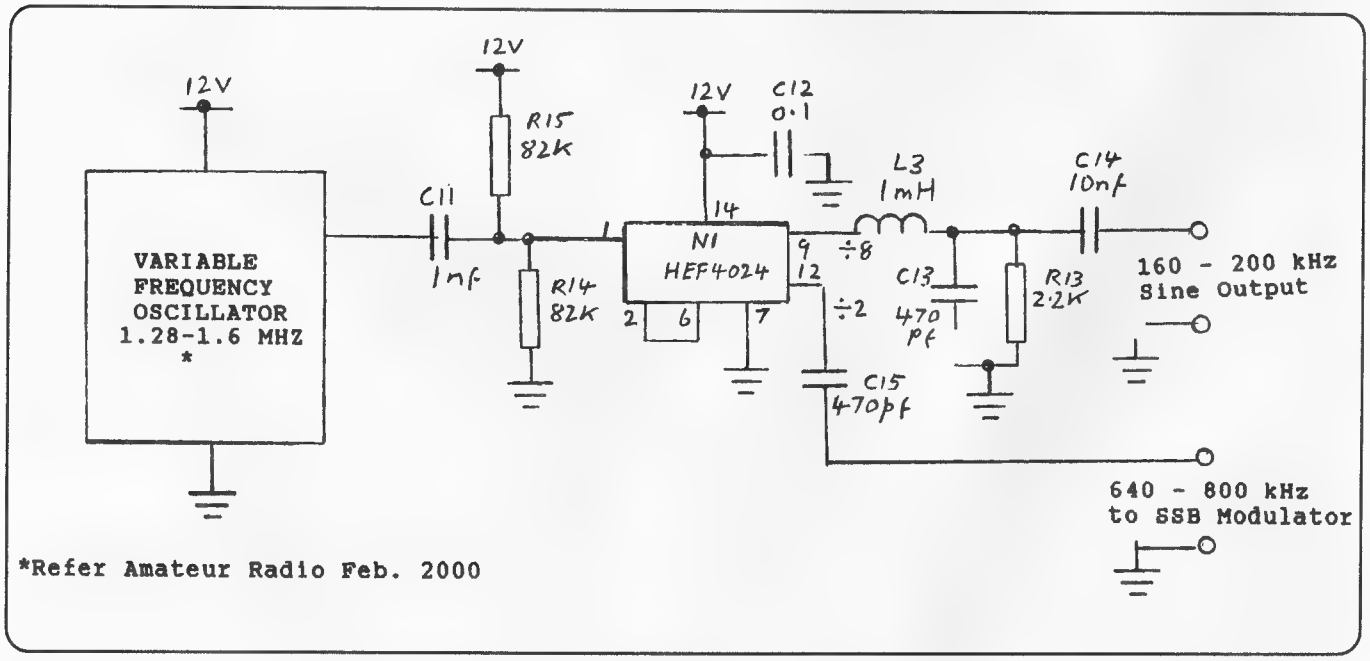

Figure 5: VFO Divider Circuit

Hardware

The integrated circuit packages and associated resistors and capacitors are hard wired on matrix board. The unit is mounted in a small metal box with control switches, potentiometer RV5 and the microphone jack, all on the front panel. It is a stand-alone unit so that the transmitter amplifier and VFO can be used with it or without it. This way, the transmitter can be used on its own for its intended earlier purpose as a keyed CW beacon for transmission tests at a suitable site. As a stand-alone unit, the modulator can also be used on any other LF transmitter we might desire to put to air.

A connector strip at the rear of the metal box provides for connection of *RF in* from the VFO, *SSB out* to the transmitter amplifier and *12 Volt supply.*

Integrated circuit packages used in this project were selected on the basis of them being on hand at the time and may not be readily available from local sources. However there is nothing critical about their selection and if anyone wishes to duplicate the circuitry, there are plenty of alternative packages. For example any general purpose op amp package such as the twin uA747 could be used for the speech amp and following balancing stages. As mentioned before, packages such as the NE602 or MC1460 could be used for the balanced modulator stages. For RF amp V4, a substitute op amp should have a high open circuit gain at 200 kHz. In the case of the digital packages, (the counter and the twin JK flip-flop), CMOS logic was chosen for operation on the 12V rail.

Performance

Peak power output level in the transmitter power amplifier can be achieved with a signal from the output of the modulator of around 6VPP. For this level, an audio level of around 6VPP is required at the input of amplifier N1A (figure 3) and the signal level from the microphone must be not less than 2 mVpp.

With careful adjustment of RV2, RV3 and RV4, the residual carrier level at the output of the transmitter can be set as low as 60 dB below maximum power output.

Optimum settings of these controls are slightly different for the upper or lower sideband. However, I imagine that if a band is approved, we would settle on a standard for which sideband is used and I don't expect there would be a need for regular on air changing between the sidebands.

I haven't any test figures for opposite sideband rejection. To measure this accurately, one needs a calibrated spectrum analyser which was not available for my tests.

Of course, there are no on air test results as these will depend on approval to transmit or approval of an LF amateur band.

Summary

A Single Sideband Modulator for the Low Frequency (LF) region has been described. The unit was constructed to operate in conjunction with the LF Transmitter previously documented by the writer and published in the February 2000 issue of *Amateur Radio.*

However as a stand-alone unit, it could well be used with any other LF transmitter.

The single sideband system uses the phasing system of balancing out the opposite sideband. The need for precision components in the audio phase shift network in this system is often emphasised as a problem for home constructors. However the writer found that by using the *polyphase network*, it seemed a lesser task than making operational the crystal ladder filter often used in the filter single sideband system.

A feature of the phasing system is that it does not need tuning or frequency dependent circuits in its generation. The only frequency dependent element in this unit is a low pass filter set to cut off higher order components of frequency above the LF band of operation..

References

1. Lloyd Butler VK5BR - *An Experimental Low Frequency (LF) band Transmitter — Amateur Radio*, Feb. 2000.2. Lloyd Butler VK5BR - The Ladder Filter Revived - Amateur Radio, March 1990.
3. *Radio Communication Handbook (RSGB)*, Sixth Edition, Chapter 7 - HF Transmitters and Transceivers.
4. *ARRL Handbook for the Radio Amateur*, 1989 Edition, Chapter 18 - Voice Communications.

APPENDIX

Explanation of Phasing Method of SSB Generation with Vectors

(From RSGB Radio Communications Handbook)

For this explanation, reference is made to figure A1. Diagrams (a) show two carriers A and B of the same frequency and phase, one of which is modulated in a balanced modulator by an audio tone to produce contra-rotating sidebands A1 and A2, and the other modulated by a 90 degrees phase shifted version of the same audio tone. This produces sidebands B1 and B2 which have a 90 degree phase relationship with their A counterparts. The carrier vector is shown dotted since the carrier is absent from the output of the balanced modulators. Figure A1(b) shows the vector relationship if the carrier B is shifted in phase by 90 degrees and figure A1(c) shows the addition of these two signals. It is evident that sidebands A2 and B2 are in anti-phase and therefore cancel whereas A1 and B1 are in phase and additive. The result is that single sideboard is produced by this process.

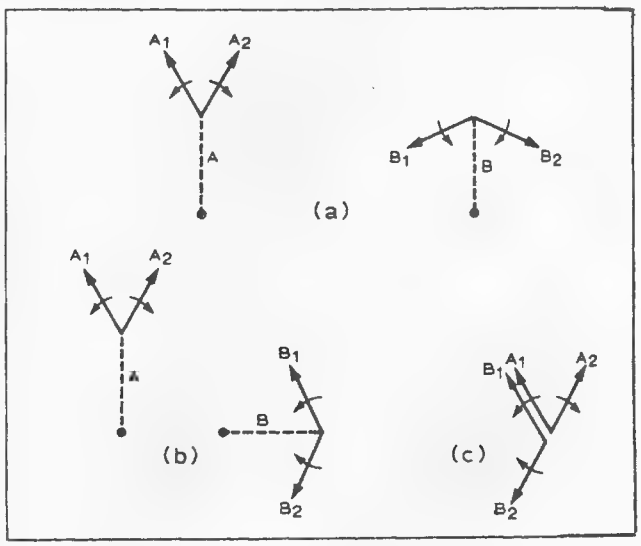

Figure A1: Phasing System Vectors
(From RSGB *Radio Communication Handbook*)

Technical Abstracts

Gil Sones VK3AUI
30 Moore Street, Box Hill South Vic 3128

RF Power Meter

A simple and easy to calibrate RF power meter was described in Rad Com Jan 2000 and Feb 2000 issues. The meter was titled the Crawley Power Meter. The authors were Derek Atter G3GRO and Stewart Bryant G3YSX. The meter uses a power substitution technique with a small wire ended light bulb as the measuring element. An accuracy of 1 dB over a power range of 125 microwatts to 150 milliwatts was obtained. The frequency range was within 1 dB up to 280 MHz.

The bulb used was a 6 Volt 55 mA wire ended bulb obtained from RS Components Cat No 587-068. These should be available locally. The basic circuit is shown in Fig 1. The circuit keeps the bulb at a constant resistance of 100 Ohms by varying the amount of DC current passed through the bulb to keep its resistance constant when RF power is dissipated in the bulb. The bridge circuit varies the DC current through the bulb so as to keep it at a constant resistance. The bulb is a non linear resistance element whose resistance varies with the amount of power being dissipated. More power increases the resistance and less power lowers the resistance. The bridge circuit varies the DC current to hold the bulb at a constant resistance. The RF power is represented by the variation in the DC power.

The RF power is given by the equation:

$$P_{rf} = 10\ V\ \Delta V\ mW$$

where P_{rf} is the RF input power in mW.

V is the voltage across the RF sense head bulb and 100 Ohm resistor.

ΔV is the is the difference between the voltage across the head with and without RF power.

The power meter circuit is shown in Fig 2. A digital voltmeter module is used as the power indicator. The voltmeter module requires a separate floating supply from the rest of the instrument. Both an internal RF power head and an external power head are provided for. The only critical wiring is around the RF input and the bulb and 100 Ohm resistor and associated coupling and bypass capacitors. The wiring should be short and direct in order to achieve a high upper frequency measuring limit. All the presets are 10 turn pots to allow easy adjustment and calibration. RV1 is the zero set and should be on the panel. RV2 and RV3 can be set with the aid of a digital multimeter. The resistors used are all 0.6W 1% types. The capaitors with the exception of the 1 microfarad electrolytic are all disc ceramic.

Calibration requires the use of a digital multimeter and a calculator to set RV2 and RV3. The scaling equation is :

$$\frac{RA}{RA + RB} = \frac{10 * V * VM}{Prf}$$

Where RA is the resistance at the input to the DVM module - dominated by RV2 and RV3.

RA + RB is the resistance of RV2 and RV3 in series.

V is the voltage in Volts across the RF head when no power is applied.

VM is the DVM module voltage in Volts when Prf is applied.

Usually 200 mV.

Prf is the power in mW for full scale. 200 mW or 20 mW in this case. All the values can be measured and set with a digital multimeter.

If you are using an internal and an external head you should select and match the bulbs. Use a jig and match for the bias voltage across the bulbs with no RF applied. You should be able to obtain sufficient as the pack size is 10 bulbs from the supplier.

If you want to measure higher powers then an attenuator can be used to increase the power which can be measured. A 30 dB power attenuator would give a 150 watt range.

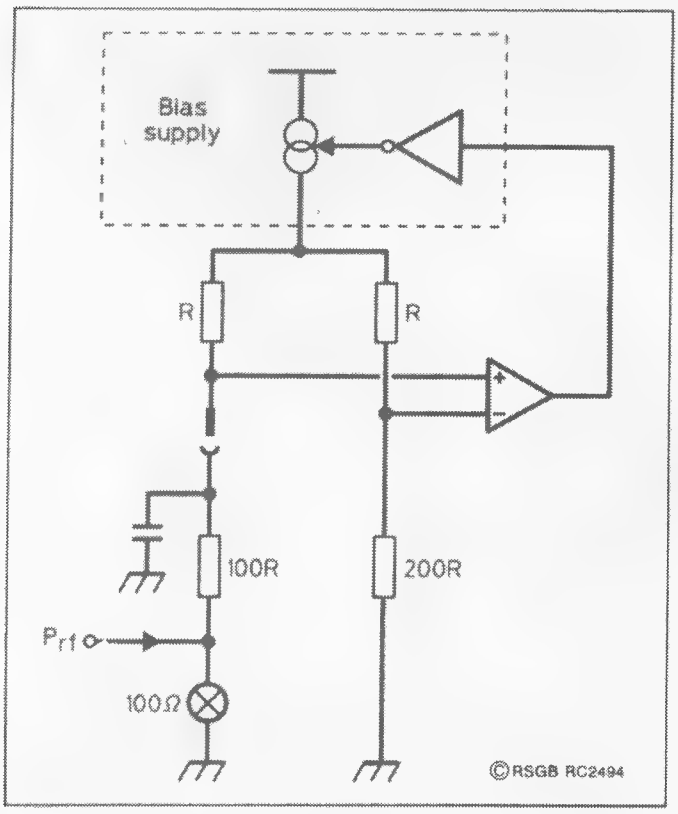

Fig 1. RF Sense Head with Bridge Controlled DC Bias.

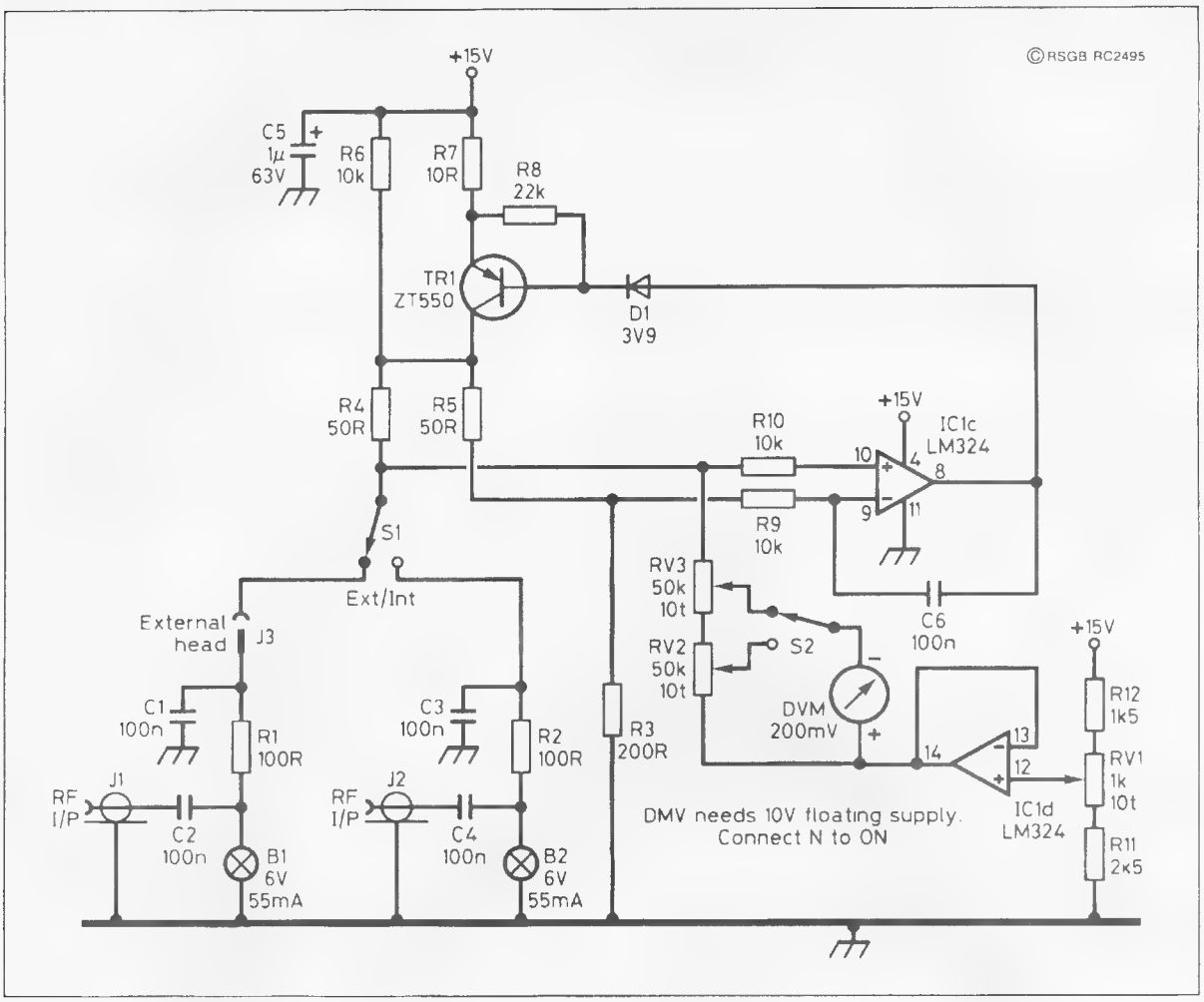

Fig 2. RF Power Meter.

Close Coupled Vertical Antenna

An interesting multiband vertical antenna consisting of a vertical monopole with one or more earthed close spaced parasitic elements was described in the Eurotek column of Erwin David G4LQI in Rad Com January 2000. The antenna is the work of Peter Bertram DJ2ZS and was originally published in CQ DL October 1999. The designs were obtained from an antenna optimisation program using a genetic algorithm. The antenna can be called an Open Sleeve Vertical or a Close Coupled Resonator Antenna.

The antennas are modelled over a perfectly reflecting earth plane and this would mean many radials or wire mesh on top of the ground in practice. They are computer models and so some variation can occur due to practical physical differences. The longest element is fed although this is not mandatory. All elements are 16 mm diameter.

The basic layout of a three band antenna is shown in Fig 3. In the data the feedpoint is the origon of the coordinate system as shown in Fig 4. The spacing of elements is given from the fed monopole. The data does not give the SWR on each

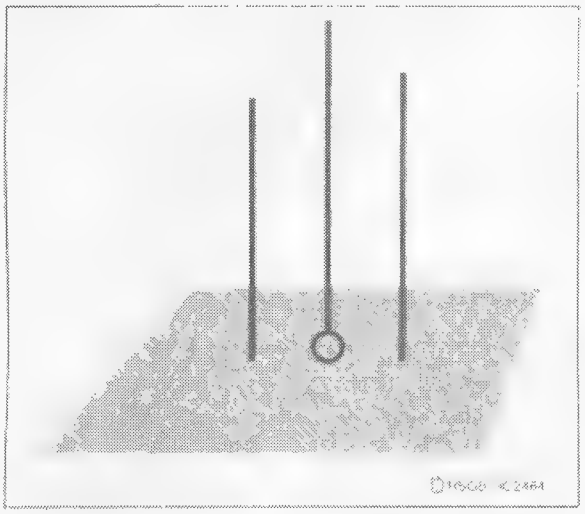

Fig 3. Basic Three Band Open Sleeve or Close Coupled Monopole

frequency but gives the sum of the SWR for the antenna frequencies. Thus a two band model will have a best SWR sum of 2 and a three band model will have a best SWR sum of 3.

Some two band dimensions are shown in Table 1. Three band models are shown in Table 2.

The optimisation program Pascal source code is obtainable from Peter Bertram DJ2ZS, Wittlicher Strasse 30, D-54538 Hontheim. E-mail : dj2zs@t-online.de .

Table 1. Two Band Combinations

MHz		Z 0	Z 1	X 1	Sum SWR
24.9	28.1	3.02	2.4	0.15	2.59
21.1	24.9	3.52	2.82	0.26	2.98
18.1	21.1	4.01	3.22	0.38	2.46
14.1	18.1	5.34	3.93	0.23	2.94
10.1	14.1	7.46	5.08	0.27	2.95

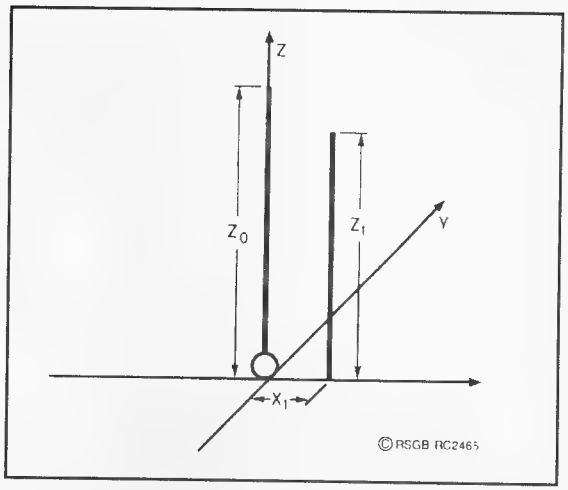

Fig 4. Two Band System with coordinate system.

Table 2. Three Band Combinations

MHz			Z 0	Z 1	Z 2	X 1	X 2	Sum SWR
18.1	24.9	28.1	3.67	2.72	2.52	0.54	-0.24	4.23
14.1	21.1	28.1	5.53	3.32	2.54	0.37	-0.36	4.47
10.1	18.1	24.9	7.37	3.95	2.91	0.25	-0.28	4.09

RF Bridge

A simple resistive bridge appeared in OZ February 2000. The author was Flemming Hessel OZ8XW. The bridge uses Surface Mount resistors to minimise lead lengths and the construction is on a double sided PC board with tracks acting as microstrip transmission lines. This helps with the extended frequency response as the effect of lead lengths and discontinuities is minimised.

The circuit is shown in Fig 5. The connection to the unknown is at the junction of C1 and R3 as shown in Fig 7. The 50 Ohm resistors are obtained by paralleling 100 Ohm resistors. This may be easier than obtaining 50 Ohm components. The PCB is shown in Fig 6. The tracks should be suitable width for 50 Ohm microstrip. The parts layout is shown in Fig 7.

You can drive the bridge with an oscillator or from a transceiver with a suitable output attenuator to give 50 - 200 mW to drive the bridge.

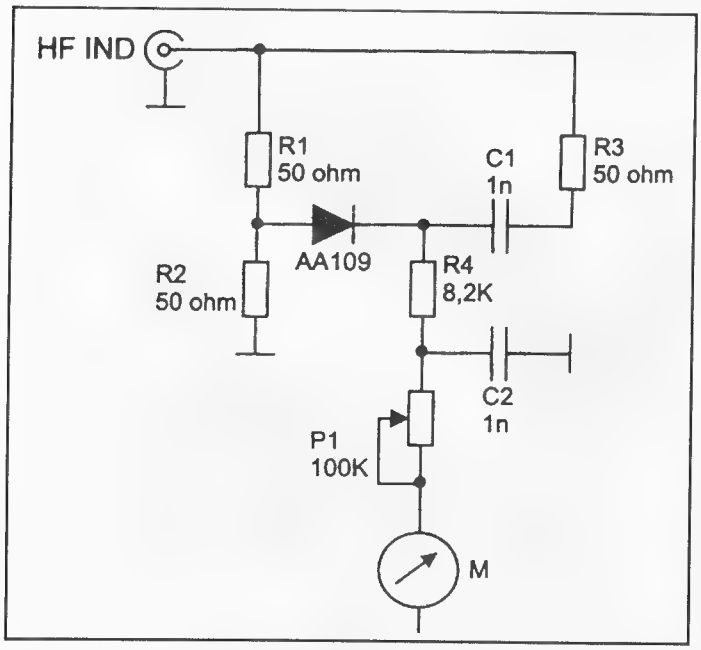

Fig 5. RF Bridge

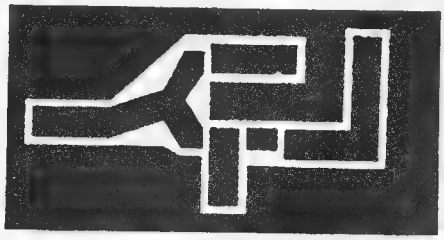

Fig 6. PCB Track Layout.

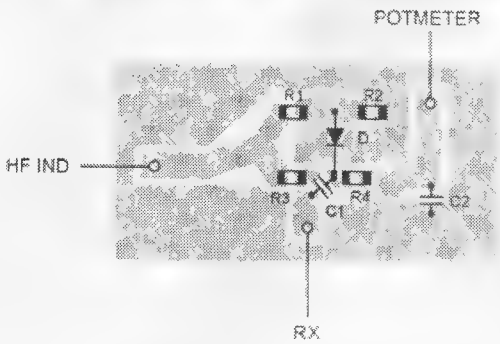

Fig 7. Component Placing on PCB.

Using Cable TV Hardline

CABLE TV HARDLINE in usable lengths is often available as scrap. It is a high quality 75 Ohm coaxial cable with a solid aluminium jacket. It is around 1/2 inch in diameter. The losses are low up through the VHF and UHF bands but connectors are a problem. The 75 Ohm impedance is not a big problem as many antennas can be matched to 75 Ohms and mos rigs will not object to a 75 Ohm load. If the impedance is critical there are a number of simple matching systems which can be used but usually a 1.5 : 1 SWR is quite satisfactory.

The main problem is the supply of suitable connectors. A way of using PL259 plugs was described in the World Above 50 MHz column of Emil Pocock W3EP in QST January 2000.

The cable centre conductor will fit into the connector centre pin. A split sleeve of aluminium tubing is used to connect the cable outer to the barrel of the connector. The sleeve is split and clamped with two worm drive hose clamps to hold it and make the connections.

Cut the cable shield 1 3/8 th inches from the end using a circular tubing cutter. Score a shallow groove at first and then slowly tighten the cutter while cutting so as not to crush the aluminium shield before the blade has had a chance to cut through to the foam insulation. Then snip away the short length of aluminium shieldexposing the foam insulation. Then remove exactly 7/8ths inch of foam insulation from the end. Take care not to nick ,score ,or scratch the centre conductor.

The outer connecting sleeve is made from 5/8th inch diameter 0.058 inch wall aluminium tubing. A length of 1 1/4 inches is used. This is split lengthwise by cutting a slit along one side. The sleeve will then slide over the cable outer and the PL259 barrel.

Slide on the split sleeve , two hose clamps, and the outer shell of the PL259 over the cable outer. Then screw the connector barrel onto the end of the cable. Screw the barrel on so that the foam insulation is right past the solder holes. The inner conductor should be up inside the centre pin and can now be soldered. Screw on the outer shell and push up the split sleeve so that it covers both the barrel and the cable outer shield. Do up the hose clamps to compress the sleeve so as to make both electrical and mechanical connection between the sleeve and the coax shield and between the sleeve and the connector barrel.

For outdoor use the connector will require waterproofing. Several layers of good quality tape should be used.

The cable should be protected from kinking as it is easily ruined by unwise bending. Use a generous bend radius.

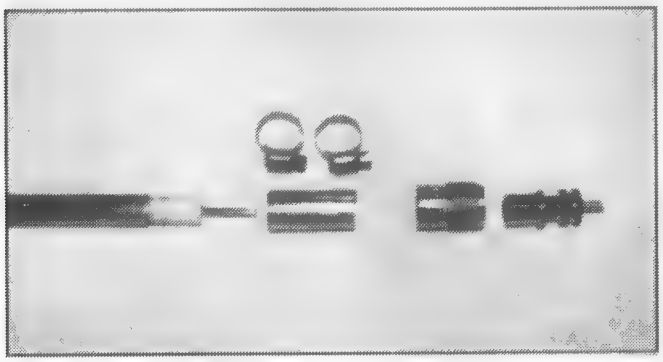

Photo 1. Prepared Cable End with adapter sleeve , two hose clamps and connector ready for assembly.

Errata

IN THE ITEM in June Technical Abstracts on Diode Matching an error crept into the wiring diagram. The corrected diagram appeared in May 2000 Rad Com. The correction came from Pat Hawker G3VA.

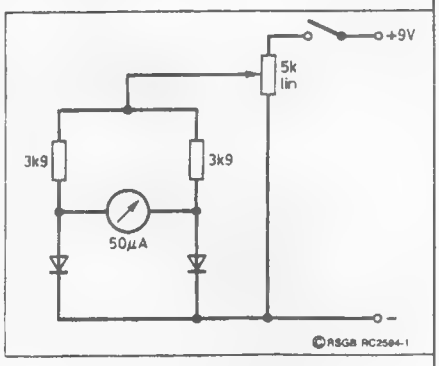

Figure 3: Corrected wiring diagram for Diode Matching

The corrected diagram is shown in Fig 3. The correction is to reverse the diodes. The diodes were originally shown reversed.

GREMLINS GOT INTO the Long Wire for Six and Ten in the July Technical Abstracts. The gremlins got into both the original QST article and then had another go with AR.

In the QST article Bob Witmer W3RW in QST April 2000 the length of the long wire section of the antenna was given as 96 ft 6 inches instead of the correct length of 93 feet 6 inches.

In AR the antenna diagram was incorrect and Figure 1 should have been one which showed the layout of the antenna. A correct diagram appeared in the Technical Topics column of Pat Hawker G3VA in Rad Com July 2000. This is the diagram which is shown here as Figure 7. This has been used in preference to the omitted and incorrect diagram from QST.

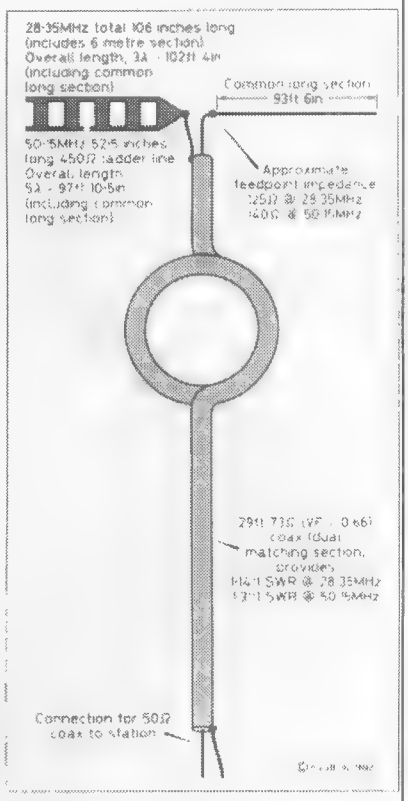

Figure 7: W3RW Dual Band Long Wire Antenna

there to be used

The Good Old Days of Crystal Sets and Morse Code

Jim Davis VK7OW has a great collection of Amateur Radio historical items and stories. In AR May 1999 page 20, the move of American Radio Astronomer Grote Reber to VK7 20 years ago was described.

In AR January 1999 page 6 there was an article on "The great crystal set competition" Jim has sent us some photos of early commercial Crystal Sets with cat's whisker detectors from his museum. There is a "HOWE" and a "LEMCO" from the USA and a British "REVO" with a BBC approval sticker

Jim's collection does include practical teaching aids. He has the original HMV 78rpm disks containing the Marconi Official Training Signals used to train radio operators around the WW1 1914-1918 period. Unfortunately, it is rather difficult to do justice to audio items in the pages of Amateur Radio. Jim provided us with a cassette tape of the recordings which includes Jim's notes on the content of each track. The editor should be able to supply a copy of the tape if required.

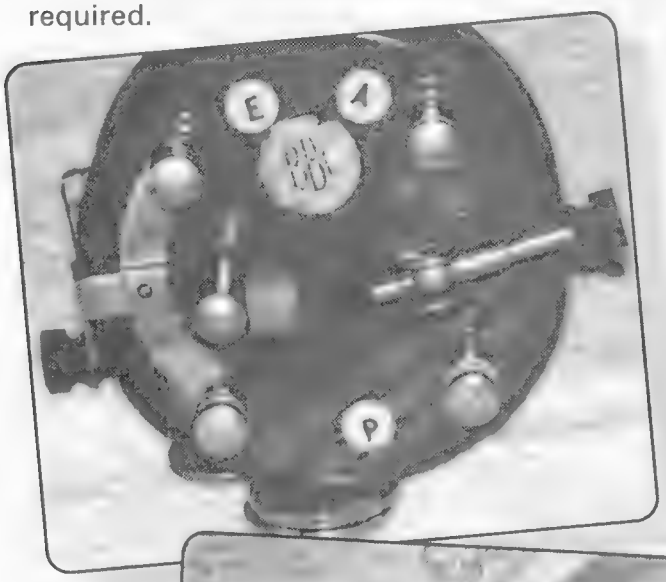

Jim suggests that a humorous introduction to an article might be "So you want to learn Morse code? It's simple! All you need is a phonograph; a stroboscope for setting the turntable speed at exactly 78rpm; an oil can (for oiling the governor leather- see instruction No 7 on the record sleeve) and a supply of Marconi Official Training Signals recorded by HMV".

Bill Rice VK3ABP

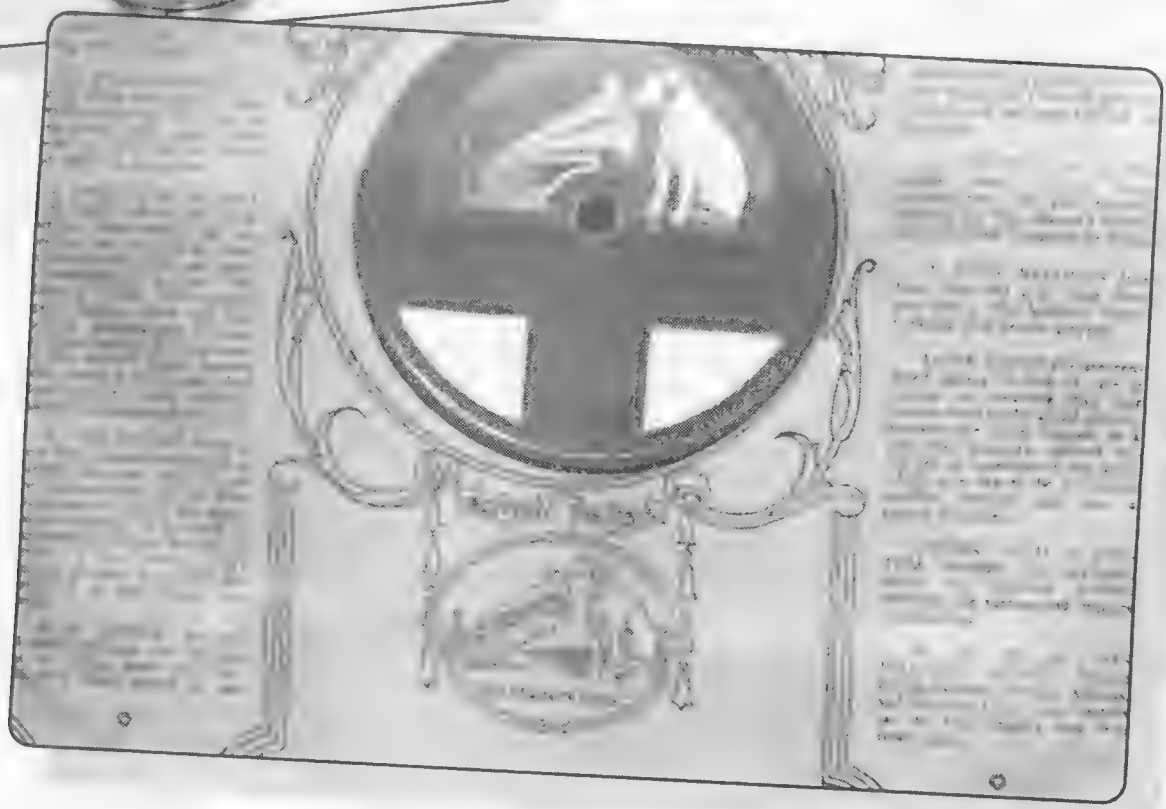

Post WW2 Amateur Radio: a phenomenal social link

Sid Ward VK2SW reviews a period of home brew and hectic activity, bolstered by a never-ending supply of wartime surplus equipment

Sid Ward VK2SW.

Firstly, this article has not been put together to simply enable old timers to drift back to the way things were in the dim dark ages. Far from it, my sole reason for putting the following together is to hopefully encourage the newer arrivals to Amateur Radio to be aware of, and maybe learn a little of what has happened in the past.
A little bit like a written time capsule.

I will commence my story from the most likely logical point in amateur radio time, after WW2, when confiscated pre-war transmitting equipment was returned to the then, current, pre-war licensees.

This was a period of great excitement. Enthusiasts had been denied access to the worldwide hobby and naturally it did not take too long for signals to appear on all current bands. Many amateur licence training courses became available to the enthusiasts. It was a period of hectic activity. There was a never-ending supply of wartime surplus equipment becoming available... transmitters, receivers, power supplies, crystals, valves.... You name it.

Within six months or so, there was an escalation in new call signs appearing over the whole of Australia (and I dare say, around the world.) Almost every item of transmitting equipment on the air in Australia was fully or part "home-brewed". In the majority of cases, even the receivers were in this same category. Wartime receivers were generally excellent for military use, but fell a long way short of the special high sensitivity and high selectivity required for serious amateur work. (Particularly up on ten metres, which was enjoying some excellent sunspot, numbers around this period). Essential to every shack were a soldering iron, a multi-meter, a junk box of radio bits and pieces, and a copy of the ARRL handbook.

There was no shortage of amateurs on the air on *all* licensed bands (inc. VHF) and the days of the long rag-chews were with us, as almost every amateur on air was greatly involved and interested in the type of equipment that was being developed in the various shacks. There was no shortage of subjects to be spoken of or listened to. It was really activity with a capital "A". Until the arrival of SSB technology some time later, almost every bit of home manufactured RF or VHF gear was either for AM or CW. CW incidentally was every bit as popular as phone, as it easily outstripped AM when working the rarer DX. It was also a lot cheaper and easier to make. Remember ... these were pre-SSB days.

It is interesting to note that at this time, the habit of exchanging QSL cards was paramount. Almost every on-the-air amateur or short wave listener had his/her own individually designed card, and it was considered good manners to have your card adorning the wall of every station that you worked. It didn't take long for most shack walls to be covered. Long lasting personal associations and friendships were established, further enhancing this great, innovative hobby. Incidentally, The "WIA emblem" would have been displayed prominently on easily the majority of cards.

Mobile operation was very popular both on VHF (166MHz allocation) and 40 metres. Most people that could afford motor cars usually organised the fitment of applicable amateur gear. Fox hunts on 166MHz were almost a weekly event, with each participant trying to prove that his radio and antenna system was the star performer,

That famous and never-tiring amateur John Moyle, VK2JU was around during this period. He would have likely contributed more to Australian amateur radio than any other man would. For a long time he was editor of Radio and Hobbies, and equipment designed by him was duplicated in so many shacks in Australia. His contribution to amateur radio was there right up to the point where he passed away at a relatively young age. He was a tireless worker for our hobby. The John Moyle National Field Day is an on-going tribute to this top amateur of the post war years.

Another phenomenal thing that existed in these early years, was the fact that almost every country town had its own prominent amateur, who seemed to be always on the air. He was the person one contacted before any visit to his town was made. He, and his family, would be the ones to welcome the amateur visitor to their town, quite often providing accommodation to boot. He would be looking for you on the air before you arrived, as an amateur visitor in a country town often was a BIG event. We were not a mobile society in those days. It was a phenomenal social link, applicable to the period. It is also interesting to recall just how socially active forty metres was in that period. It always seemed to be populated with dozens of AM/CW contacts under way, irrespective of the time of day or night. A far cry from what 40 is like today!

...almost every country town had its own prominent amateur, who seemed to be always on the air. He was the person one contacted before any visit to his town was made. He, and his family, would be the ones to welcome the amateur visitor to their town, quite often providing accommodation to boot.

In the late '50s and mid '60s, the basic AR scene started to see change. The first signs of imported commercial SSB were with us (mainly USA), with the more

affluent of the amateur fraternity becoming involved. This was great new stuff.... and when coupled a little later with the entry of the Japanese VHF-FM transceivers into the market place, the great changeover to ready-made versatile gear was really under way. From the late '60s onwards, the overall tendency for most amateurs was to go "commercial" in the main items in the shack and in the motor car. On two metres, well-sited repeaters were doing all the work, and many amateurs slackened off in regards to base station aerials etc. The hand-held portable was soon with us.

However there was still plenty of equipment and ancillary equipment to be made by the amateur on his own workbench, if he so desired. These items included such items as aerial systems, test equipment, regulated high-current bench power supplies etc. Over succeeding years, unfortunately for the technical side of our hobby, even these relatively simple ancillary items were now being purchased from dealers, rather than being made by the amateur himself. This skill of manufacture has, no doubt, been replaced by the mammoth in-roads of technology into other very complex areas such as digital communications, satellites, high-level commuter work and the like. It has been an extremely captivating half-century. Good luck to the newcomers....

ar

Club News

AHARS Mid-year Dinner

A number of years ago it was suggested that AHARS had a Christmas Dinner. The first one was so successful that the members suggest the club have a Mid-year Dinner as well.

Usually the Mid-year Dinner is less well attended than the one at Christmas because a number of members go north to escape the cold. However, whether fewer went north or because or the increased membership recently, this year's mid-year dinner had the best ever number present.

There were 64 people that night to enjoy one of the best meals yet. Instead of the happy half hour before the dinner, this year the Club picked up the GST part of the cost of the dinner. An idea approved of by everyone. As a party it could be considered a success if the number of people who lingered till the last minute is any criterion. No one was in any hurry to get home, for sure.

The next meeting, on the third Thursday of the month will be a talk by Graham VK5ZFZ about using 'dead' computer parts to make 12 or 13.8 volt power supply for the shack.

Remember, if you are visiting Adelaide contact the Geoff VK5TY or Alby VK5TAW for details and come along to a meeting of AHARS on the third Thursday of every month except for December and July. Visitors are made to feel welcome.

News from the Moorabbin & District Radio Club

Radio on Rails Results

Results of April's Radio on Rails have now been released and are as follows:

Section A: Transmitting Mobile 1st VK3JED - 68 points: 2nd VK3YE - 55 : VK2EKG/3 - 21 points

Section D: Receiving Home 1st Craig White (SWL) - 15 points

No logs for Sections B and C were received. Thanks to all participants for supporting this event and also to those who contacted mobile stations.

MDRC Annual General Meeting

The Club's Annual General Meeting was held on Friday July 21. Official MDRC positions are:

President: Lee Moyle VK3GK
Vice President: Chris Arthur VK3JEG
Secretary: Paul Girling VK3ALE
Treasurer: Keith McCarthy VK3JNB
Committee: Above plus Rick Podolski VK3TRZ, Tony Middleditch VK3CAT and Tony Langdon VK3JED.

Other positions:

Publicity Officer: Peter Parker VK3YE
Public Officer: Ken Millis VK3TKR
QSL Officer: Tony Middleditch VK3CAT
Station Officer: Tony Middleditch VK3CAT

Paul Girling is once again looking after APC magazine and the club web page. Peter Parker and Keith McCarthy will continue to produce the weekly *APC News* bulletin.

An important issue is that of Education Officer, which remains unfilled. It is essential that this position be filled to ensure that study courses can resume and the club benefits from a steady stream of new members. Anyone interested should contact any member of the committee.

Our guest speaker was Andrew Rennie from the Space Association. Andrew's subject was well chosen covering Satellite communications, and space missions, past and present, done with an excellent commentary and some top quality coloured slides. Thanks to Andrew for a very interesting talk.

APC News now on HF

The MDRC's weekly *APC News* service continues to expand, and is often quoted on interstate and international news bulletins. Our latest innovation is an HF retransmission, being conducted by Chris VK3JEG. This transmission is becoming popular with country and interstate listener. It has been heard as far away as southern Queensland.

To hear Australia's only midweek amateur news service, tune to 3.565 MHz LSB at 8:00pm Wednesdays. Call backs will be held after the session.

Summer net season begins

With the commencement of daylight saving, the MDRC's Monday night net has reverted to two metres only. Tune to 146.550 MHz from 7:30pm and 3.567 MHz LSB (+/- QRM) after 8:00pm for the 80 metre net. Net control is our station officer Tony VK3CAT.

Peter Parker VK3YE Publicity Officer
Moorabbin & District Radio Club
parkerp@alphalink.com.au *(03) 9569 6751*

An unwelcome early Christmas present in VK1

Gilbert Hughes VK1GH

While attending an amateur Christmas drinks function on 19 December last a number of members mentioned that the Mt Ginini 2 metre voice repeater was re-transmitting aeronautical traffic. A couple of weeks earlier I had briefly heard the same problem while mobile and assumed some temporary unusual set of circumstances was responsible and had given it no more thought.

A quick listening test confirmed we had a major problem. Every transmission of a new aeronautical en route service on 133.15 MHz was retransmitted in its entirety by our repeater. This was occurring frequently, and effectively prevented the repeater being used.

The Mt Ginini repeater receives on 146.35 MHz and transmits on 146.95 MHz. Our hut is in the AirServices compound some 60 metres away from the AirSerivces towers. We have enjoyed interference free operation on this prime site since the early 1970s. Being very aware of the need to ensure that we never cause interference to AirServices, we installed band pass duplexing with extra cavity filters on both transmit and receive services, and isolators on the transmitters. Like all users on Mt Ginini, the only problem we have had is with ice build up on antennas in winter, frequently associated with high winds resulting in mechanical failure.

A check of assigned frequencies on the site, confirmed by listening, quickly pointed to the likely source of the signal on the repeater input. A continuous transmission of Aeronautical en route information service (AERIS) on 119.95 MHz, the new service on 133.15 MHz and the repeater input on 146.35 MHz are all *exactly* 13.2 MHz apart, i.e. we were faced with the worst possible situation — an on-site third order intermod.

At this point things became really interesting. AirServices are one of the few organisations who do take a very wide look when assigning frequencies and would not normally have made an assignment that, despite the wide frequency spacing, was highly likely to result in serious interference. A discussion with the frequency assigning area of AirServices revealed the startling fact that the ACA data base at the time of assignment had no listing of our 146.35MHz repeater input frequency on the site. We quickly checked and confirmed that this was indeed the position. (No, we had not forgotten to renew our licence).

Our local ACA folk quickly corrected the database, but solving the interference was a different matter. A series of joint site visits by AirServices, ACA field staff and ourselves identified the following:

1. The level of the mixing product on the repeater input, measured after the cavities, was around minus 90 dBm, and at times up to 5 dB higher.
2. Both Air Services transmitters, and the amateur repeater, have two cavities in series, and all co-ax is 214 double screened. The levels of the other services were almost too low to measure on the equipment side of the cavities, ruling out any internal mix in the equipment.
3. Employing a tunable band-pass filter and spectrum analyser, the level of the interfering mixing product was examined using a spare 160 MHz antenna on the AirService tower. The level was 20 dB higher than at the input to the amateur receiver, and was observed to vary by about 10 dB. This variation appeared to closely correlate to the gusts of wind.
4. In an ambitious attempt to positively identify the mixing point, quality monitoring equipment and filters were taken to the platform on the AirServices mast some 4 metres from the two transmitting antennas. This was a very big ask in terms of dynamic range, and failed to prove anything.
5. Temporarily moving the 133.15 MHz transmitter to the low gain antennas on the second AirServices tower about the same distance from the amateur repeater reduced the interfering product by about 5 dB but did not solve the problem. It was not practical to test with the 119.95 MHz antenna in a different location.

After a lot of hard work by all involved we knew that the mixing product was generated on the AirServices tower, possibly in the AERIS antenna, but this theory could not readily be proved owing to the obvious requirement to keep the AirServices facilities operational all times.

Clearly there were only three real fixes to this problem – one of the three frequencies had to change or move off the site. A close look at the options for the Amateur service revealed major problems. Owing the height and coverage, any change would require distant existing amateur services to change – possible but very difficult to achieve.

We took our problem to senior AirServices staff, who asked relevant questions and advised the matter would be considered. We were delighted too shortly afterwards receive advice that AirServices would change the frequency of the AERIS transmitter. Obviously an operational aeronautical service cannot be quickly changed in these circumstances, and while it was not until early March 2000 that the change

A continuous transmission of Aeronautical en route information service (AERIS) on 119.95 MHz, the new service on 133.15 MHz and the repeater input on 146.35 MHz are all exactly 13.2 MHz apart, i.e. we were faced with the worst possible situation — an on-site third order intermod.

could be made, AirServices kept us fully informed of progress. It was worth the wait, for as soon as the 119.95 MHz service was changed to 128.65 MHz the interference ceased.

It would have been interesting, if the suspect antenna could have been changed, to see if this was the principle mixing point. However it is very easy to forget that in on-site third order situations there is little real gain in identifying and 'silencing' mixing points – either you then hear the ones you could not hear before, or you think that the problem has been solved and it always eventually comes back. A frequency/site change is the only sure fix.

The first point of the story? All repeater groups should regularly check the ACA database on the ACA home page "aca.gov.au" and ensure that your services are correctly recorded in terms of site and frequency. The second point? Stay calm and patient, work with all the parties to gather the facts and discuss possible solutions.

At the end of it all, we were delighted to write to the CEO of AirServices and thank him for ready assistance we had experienced from his staff in solving a problem not of their making.

In case you are wondering why we did not go for a CTCSS solution, consider the following:

a) Ginini is a remote high site and the interference was greater than many amateur signals. CTCSS would mask the problem but would still have left us with a very unsatisfactory repeater that would have constantly dropped out on the users.

b) All users would have to have fitted CTCSS encoders – a big ask for older rigs.

Some readers may be asking why the AM aeronautical services were heard so clearly on our FM repeater. The answer is that in any mixing situation, there is always some FM produced along with the original AM.

All this happened in the middle of a major upgrade of our Mt Ginini site – a new all welded solid bar mast, new antennas, diversity reception, upgraded equipment. Once all this is completed and proven it will make another story!

Radio and Communications

Incorporating AMATEUR RADIO ACTION and CB ACTION

Published by Chris Edmondson, VK3CE

PO Box 123, Eagle Heights, Queensland 4271 • PH (07) 5545 0666 • FAX (07)5545 0622

Tracking the Trunking!

Okay, so we amateurs use transceivers — but you really should check out Uniden's remarkable new scanner!

vk3ce

Know someone who could benefit from the WIAQ-sponsored ARCS Scheme? Learn electronics the EASY way!

Download you FREE copy of ARCS from http://www.radiomag.com today and spread the good word

Read of the race to get BHUTAN, A5 activated. It's a great story — and VK played a pivotal role!
And check out the other great stories while you're at it! BUILD a NiCd battery charger with a twist.
Hey this one charges ALKALINE cells too! VK2DQ's great educational series continues,
we check out the DX and latest repeater changes, plus lots more!

Don't miss out — RADIO and COMMUNICATIONS is great reading for amateurs!

R&C has the biggest collection of radio-oriented Classified adverts in the country. There's lots of them because they work so well! Ask your newsagent to keep a copy for you each month. Hurry — you might miss something!

Check your local newsagent today

ALARA

Christine Taylor VK5CTY, ALARA Publicity Officer
16 Fairmont Avenue, Black Forest SA 5003
Packet VK5@VK5TTY Email: geensee@picknowl.com.au

It Is Our 25th Birthday This Year!

ALARA celebrates its birthday on July 25th each year with a session on 80 metres on the nearest Saturday to that date and often with special luncheons during the month. This year, unfortunately there were not many YLs on the air that Saturday night, partly because it clashed, in VK5, in particular, with a Mid-year dinner for the radio club to which most of the VK5 YLs belong. However I hear there was at least one ZL station, Bev ZL1OS there to help us celebrate.

For next year the committee suggests that we operate for the period from 1000 to 1200 UTC (on or near 3.580MHz, as usual) and that the President open the session officially. We hope that next year most of the committee will be able to be on air - and lots of other YLs, too.

The VK5 girls had a well attended Sunday luncheon at which the birthday was toasted by 13 YLs and 7 OMs, one of the largest numbers we have had for a while. VK3 celebrated the birthday on the 2nd Friday of July and the VK6 YLs on the third Friday. Remember all visitors are welcome to join the regular lunches or a special lunch can be arranged. Just contact someone on 2-metres or by the phone. It is fun to meet face to face those voices you hear.

At the VK5 luncheon were Myrna VK5YW, who ran some of the earliest 80-metre nets for, first LARA and then ALARA, and Janet VK5NEI. Neither of them are very active, but they both enjoy the chance to meet the local YLs on this once-a-year day. Like many YLs licensed in the last 25 years, Janet became a member of ALARA almost as soon as she got her licence.

One of the newest licensees and newest member of ALARA, Faith VK5ZFC was a welcome new face, along with Judy VK5BYL, well known to many of us for the recipes she used to send on VK5WIA in CW for the practice sessions, Mary VK5AMD who regularly listens out on 146.500 for travellers passing through Bordertown, Maria VK5BMT, Meg VK5YG, Debbie VK5JT with her two daughters, Sarah and Chloe, Tina VK5TMC and Christine VK5CTY. We were hosted by Jean VK5TSX, our State Rep. who had chosen the new venue and generally organised us so well.

You Can't Beat The Weather!

Marlene VK3WQ and OM Jim VK3DL make it a regular thing to escape from the cold weather in VK3 to their second home in Hervey Bay. This year the weather beat them. When they arrived in Hervey Bay it was colder than it had been in Melbourne. What is more it stayed that way for quite a while!! Life is not fair, is it?

A Special Station To Listen Out For

AX9YL - a YL mini-DXpedition to Norfolk Island. A multinational team of YL operators (mainly ALARA members) will be active on both SSB and CW from Norfolk Island from 5th - 12th October.

They have called it a "mini" DXpedition because they will not be using either amplifiers or beams - just wire antennas plus a vertical borrowed from Dave, ZLIAMN, and will operate in between sightseeing trips around the island. However, they will still be very active on the airwaves so if you hear them on please call in and say hello.

This special call was obtained by the WIA Victoria, so QSL will he via the VK3 Buro or direct to Gwen, VK3DYL, with return postage and SAE, without which cards will be returned via the Bureau.

Spotlight on SWLing

by Robin L. Harwood VK7RH

"Listening In" to the Olympics

Well, the Olympics have arrived and commence on the 13th of this month, two days prior to the Opening Ceremony in Sydney. The first event will be a soccer match in Melbourne at the site of the 1956 Games. I believe that these games will be extensively covered in all forms of the media including shortwave radio. Expect live commentary in a multitude of languages and frequencies.I do know that Radio Australia will be giving extensive coverage of the Olympics.However since Atlanta I know that listeners outside of the South Pacific are experiencing difficulties finding Shepparton and it is unlikely that they will get to use Darwin.

I noticed that our friends across the Tasman at Radio New Zealand International have resumed their relay of sports descriptions from a private network.

In August I was up on Queensland's Sunshine Coast and the only receiver I had was a Chinese-made "Digitor" model I acquired many years ago. Listening just on a whip was an interesting exercise and I found the best results were on the 13, 16 and 19 metre broadcasting allocations.The Digitor has two shortwave bands- the first is from 3.2 MHz to 7.3 MHz and the second is from 9.5 to 21.75 mhz. Here in this block of units the lower band has been very disappointing and the only bands that are bringing in signals are the above-mentioned allocations.

Radio Australia comes in very easily on 15240, 15415 and 17750 in the daylight hours.Also Radio New Zealand International on 17675 can be good at times but it is not reliable. However it is the 13 meter allocation which has proved to be very interesting with the Middle Eastern stations on 21630 and 21735 from the Gulf that are booming as is the Voice of Turkey from Ankara on 21715 kHz.

Another station probably UAE Radio in Dubaii is on 21705 kHz. Generally signals from Asia are much stronger than they are back home in northern Tasmania and I also note that propagation is open longer on the higher frequencies than it is in Tasmania.

I note that this Digitor has double conversion and the images are 910 kHz below the fundamental and can be better as well. As I mentioned, the band allocation is somewhat limited yet I can hear stations on their image frequency although their fundamental is not covered.

For instance the Voice of Russia on 21790 is supposed to be outside the band yet I can hear them on 20900. Also the maritime allocation on 22 mhz breaks through on images.

This particular Digitor is no longer manufactured and tunes in 5 kHz steps. It does not have a BFO yet it does have five memory positions. It has AM annd FM plus the two shortwave allocations.

On FM it is interesting as there are about 30 stations I can hear from my unit. Some are in Brisbane but there are many from the coast and the adjoining hinterland.I note many of the tourist information stations at the bottom edge of the band have gone, just as they have in Tasmania.

Well,that is all for this month. All the best listening in to the Olympics via shortwave, if you can tear yourself away from watching on television or fortunate actually being there.

73, Robin L.Harwood VK7RH

ar

Turn off the TV,

Turn on the Rig!

For All Your Requirements

AUTHORISED DEALER

ICOM

KENWOOD

AMATEUR & COMMERCIAL MARINE COMMUNICATIONS

Tower Communications

14 Mary Street
Hazelmere
Western Australia 6055
Telephone: (08) 9274 1118
Facsimile: (08) 9250 3734
E-mail.tower@eon.net.au
www: http://www.tower visionimage.com au

DON'T MISS THE ACTION!

High Performance VHF/UHF Base Station Antennas

Diamond base station antennas offer outstanding quality and exceptional value. These stacked collinear types provide high gain, wide bandwidth and a low radiation angle for extended range. The fibreglass reinforced polyester outer radome and gasket seals provide excellent all-weather operation, and compact ground-plane radials are supplied. Stainless-steel mounting hardware ensures a long, trouble-free life. Supplied with instruction sheets for easy set-up.

2m/70cm X-50A

Frequency:	144-148MHz, 430-450MHz
Gain:	4.5dB on 2m, 7.2dB on 70cm
Max. power:	200W
Length:	1.7m, max wind 60m/s
Type:	6/8λ (2m) 3 x 5/8λ (70cm)
Connector:	SO-239 socket

D 4855

$135 SAVE $9

Digitor 2m 30W RF Power Amplifier

If you use your 2m band FM hand-held at home or in the car, but find that 2-3W RF output isn't enough for reliable communications, then this compact 30W RF amplifier may be the answer. It works with inputs from 0.5 to 5W and produces up to 30W output with just 3W input. A switchable 12-15dB gain low-noise GaAs FET receiver pre-amplifier can be selected for improved receiver performance on less sensitive hand-helds when being used in RF quiet areas. The amplifier offers a large heatsink for extended duty-cycle transmissions, fused DC power lead, and SO-239 input/output connectors. Frequency range 144-148MHz, FM only. Size: 100 x 36 x 175mm(WHD).

D 2510

digitor $96 SAVE $20

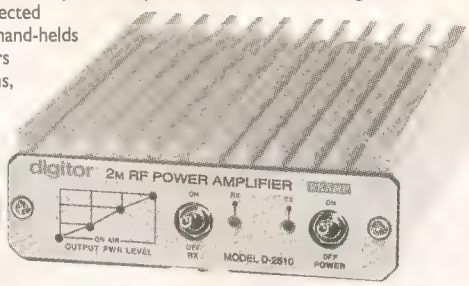

Economy Soldering Station

Affordable quality for the technician or enthusiast. This new soldering station provides variable temperature control from approx. 250°C to 450°C, plus zero voltage crossing circuitry for low noise operation. While not a sensor-compensated temperature-controlled design, it is suitable for a wide range of soldering applications. It features a lightweight soldering pencil with heat-resistant cable, iron holder and a tip cleaning sponge, and is full Energy Authority approved. Supplied with a long- life 1.6mm plated tip.

T 1975

$98 SAVE $25

PowerHouse stores

A shopping experience like no other!

Dick Smith PowerHouse stores not only offer an expanded range of those original electronics products that have made our stores famous, but now you can experience the fun of using a wide range of communication equipment in our hands-on demonstration area.

Called the "Ham Shack", each PowerHouse store has a dedicated area where licensed staff can show you the latest Yaesu, Uniden, or Magellan communications and GPS products, as well as an expanded range of accessory lines that may not be available in other stores.

Not involved in Ham Radio? Staff can also advise on the installation of a CB radio for your four-wheel drive vehicle, how to get involved in listening to Shortwave radio stations from around the world, or assist you in the selection of a suitable accessory for an existing piece of equipment. For bushwalking or boating users, you can also find out about the latest in inexpensive satellite based navigation receivers or emergency beacons, or just browse through an extensive selection of communications related books.

The PowerHouse is also the place to go if you simply need a component to finish that weekend project, to buy tools, or just to while away a few hours while checking out our in-store technical books, library CD-ROMs, or our dedicated customer use Internet terminals.

With over 20,000 product lines in the electrical, computer, and communications areas, our new PowerHouse stores get the wavelength right!

DON'T MISS THE ACTION!

VX-IR 2m/70cm Micro Handheld

One of the worlds smallest dualband handhelds, just 47 x 81 x 25mm (WHD) including a high capacity 700mA/H Lithium-ion battery! The VX-IR covers both 2m and 70cm amateur bands, plus offers AM/FM and TV sound reception, 2 hour fast charging as standard, simple settings and a large LCD screen.

2 YEAR WARRANTY

Features:

- Tx: 144-148, 430-450MHz.
- Rx: 0.5-1.7MHz, 76-300MHz, 300-580MHz, 580-999MHz (cellular locked out).
- Output: 2m/70cm 0.5W (at 3.6V), 1.0W with external DC.
- 291 memories, most with alpha naming.
- AM, FM (n), and FM (w) reception modes.
- CTCSS encode/decode.
- 31 smart search memories.
- Tone search for CTCSS and DCS.
- Includes FNB-52LI 3.6V 700mA/H Lithium-ion battery, regulated AC adaptor/charger, antenna and belt-clip.

D 3665

$370

YAESU

PRICE BREAKTHROUGH!

Yaesu FT-90R 2m/70cm micro mobile

Another engineering breakthrough from Yaesu – a tiny-dual band mobile rig with high power output, a remoteable front panel, and a rugged receiver front-end. The FT-90R provides 50W RF output on the 2m band as well as 35W output on the 70cm band, a solid die-cast casing with microprocessor controlled cooling fan for reliable operation, and a large back-lit LCD screen, all in a package measuring just 100mm x 30mm x 138mm .

Also includes:

- Wide dynamic range receiver for greatly reduced pager breakthrough.
- Huge receiver coverage – 100-230, 300-530, 810-999.975MHz (Cellular blocked).
- 180 memories and a variety of scanning functions.
- Built-in CTCSS encode/decode, battery voltage metering.
- Designed for 1200 and 9600 baud packet operation.
- Tiny remoteable front panel (requires optional YSK-90 separation kit)
- Includes MH-42 hand mic, DC power lead, and easy to follow instructions.

D 3312

SAVE $100

2 YEAR WARRANTY

$749

YAESU

YSK-90 Front Panel Separation Kit D 3317

$129.95

PHONE FAX AND MAIL ORDERS

direct link

PHONE: **WITHIN AUSTRALIA: 1300 366 644** (Local call charge)

FAX: **(02) 9395 1155** within Australia and **(+612) 9395 1155** from outside Australia

Visit our web site at http://www.dse.com.au

MAIL: **DICK SMITH ELECTRONICS,** Direct Link, Reply Paid 160, PO Box 321, North Ryde NSW 1670 (No stamp required)

Excludes packaging and postage. All major credit cards accepted.
14 Day Money Back Guaranteed if NOT completely satisfied. (Software excluded)

DICK SMITH ELECTRONICS

That's where you go!

Yaesu transceivers and accessories stocked in selected stores only. Other stores can place orders on a deposit-paid basis. Offers expire 30/9/2000. All prices shown are inclusive of GST.

1471 DPS/col.

Division News

VK1 Notes

Forward Bias

Peter Kloppenburg VK1CPK

The long awaited GST has now become reality. As expected, the membership fees have gone up since July 1, but not to the extent you were expecting. So, what are the new fees? Full members (F) pay $77, Pensioners, Needy (G) and Students (S) pay $58, Non-receipt of AR (X) pay $49. The increase in fees is only a small amount considering the seachange of increases and decreases in the cost of goods and services that is occurring right now in Australia.

The break-in at the Maddens Plains (NSW) repeater site is bad news for all of us. This Division suffered a break-in at Mount Ginini some years back, which had nasty consequences. Equipment had to be replaced, repairs made to building and entrance doors, and many hours spend by dedicated volunteers getting the system operational again. As a precaution and with a sense of good management, the Division now pays a premium of over $500 a year for comprehensive insurance. That's where your money goes, folks!

Speaking about money, the Division has placed an order for the purchase of an MFJ-259B 1.8-170 MHz SWR Analyzer. This device is for use by members who want to do measurements on their antenna systems, Ls and Cs, transmission lines, baluns, antenna tuners etc etc. The analyzer is portable and battery powered, and can therefore be taken into the field, onto towers and building roofs. Exactly how it is used will be demonstrated during a future General Meeting. For those who want to know now, visit the manufacturer's Website at: www.mfjenterprises.com

The Novice Examination event on July 30 went very well, with a pass rate of about 80% overall. Due to the publicity given to the event in amateur circles, candidates were a mixture of young and old, members of the WIA and non-members, students from the WIA Novice Course, and even a NSW candidate.

The use of the 70-cm band by radio amateurs is likely to be reduced in the near future. Information received says that the Armed Forces have relinquished the first 10 MHz as primary users, and the ACA has handed that part over to the Western Australian Police Services and other Government Departments. The WIA - ACA Liaison team will have a meeting with the ACA to discuss this matter, but it is suspected that Police Services in the other states will demand the same sort of access to the 70 cm band in the not too distant future. The question is: Will Australian Amateurs have access as secondary users as before?

The next General Meeting of the ACT Division will be held on September 25, 2000 at the Griffin Center, Civic, Canberra City, 8 pm. Cheers, Peter K

VK3 Notes

By Jim Linton VK3PC

Frequency - the movie

The film is certainly not a box office blockbuster - but still provided a public relations opportunity for WIA Victoria and amateur radio when it showed at cinemas last month.

Teams of WIA Victoria members mounted active displays on Thursday, August 3, for the opening of the movie "Frequency" - which includes the use of amateur radio in its plot.

Three teams of members took part: Ray Cowling VK3ACR, Michael Pain VK3DCP at the Balwyn Cinema, John Brown VK3NYE and John Bell VK3FJB - Cameo Belgrave Cinema, Ron Cook VK3AFW and Maggie Iaquinto VK3CFI - Dendy Brighton Cinema.

The WIA Victoria Council expresses a sincere thank you to those six members who rose to the occasion and helped show our hobby in a better light than the image portrayed in the movie.

Each cinema had a non-working HF rig, plus an operating 2-metre FM transceiver on display. Sadly, few people saw the two screenings of the movie on opening night, indicating that it might have a very short season indeed. However the WIA Victoria members who mounted the displays did get to talk to cinemagoers, explained what amateur radio is about, and gave them a handout information sheet on the hobby. Using the Melbourne repeater VK3RML there was a flurry of activity by the cinema portable stations. Thanks to those operators who made contact QSOs and took part in the demonstration.

WIA Victoria display material, including a QSL card display by Ken Matchett VK3TL, a poster "Seen Frequency the movie? Now learn about real amateur radio!" and a handout called "Amateur Radio - the hobby for everyone" remained at the cinemas for the season of the movie. It does not end there! When Frequency comes out on video WIA Victoria will seek further public relations opportunities in terms of display posters at selected video hire outlets.

Tough battle ahead

Are you in there fighting? Amateur Radio is certainly facing some stiff competition from computers, the Internet and many other forms of 21st century telecommunications. Some radio amateurs get bogged down in debating whether the code should stay or go, while mostly ignoring the

enormous innovation occurring in commercial and domestic communications.

These are threats. Worldwide there are more than 2.5 million radio amateurs and contrary to what is happening in Australia where numbers are stagnating, participation overseas is growing. The IARU reports that radio amateur numbers globally have never been higher. New digital modes have arrived on the amateur radio scene but very few are willing to take their hands off the traditional microphone and/or Morse code key.

Still extremely popular in a global sense is the *Jamboree on the Air (JOTA)*. Do enough VK's take advantage of this event that shows youngsters our hobby? The doomsayers among us point to the fact that the radio amateur population is steadily growing older, and so is the general population. There is pressure to squeeze radio amateurs off the spectrum. Whether it be broadcasting, cellular phones, pagers, and a host of new emerging uses of spectrum. Commercial interests are ready to pay top dollar for radio real estate, and governments are more than willing to sell it - just look at the recent spectrum auctions here and overseas.

Think what you can do to support your hobby, in addition to being a member of WIA Victoria.

Remembrance Day Contest

Did you get on air for the RD Contest? Exchange numbers and have a bit of fun? Well make that participation count by submitting a valid entry and contribute towards VK3's participation level. For VK3 to win this year there must be an increase in both VHF and HF activity - this is where your log, no matter if it only has a handful of contracts, it will still count and be most welcome. Check your log sheets for the callsigns of friends, and give them a friendly reminder to submit an entry, or offer to help if they are not sure what to do.

Send logs and summary sheets to: RD Contest Co-ordinator, A Petkovic, VK6APK, 26 Freeman Way, Marmion, WA 6020, by Friday 15 September, 2000. Endorse envelope "Remembrance Day Contest" on front outside.

WIA Victoria is striking a new perpetual trophy to be awarded to the individual radio amateur who contributes the most points to the VK3 score. Another trophy for the best "newbie" or rookie station with the highest score will also be awarded.

WIA Victoria Tel: 9885 9261 40G Victory Boulevard Fax: 9885 9298 Ashburton 3147

Office Hours: Tuesday & Thursday 10.00am to 2.30pm VK3BWI broadcast 1st/3rd Sunday at 2000 hours.

Web site: www.tbsa.com.au/~wiavic Email wiavic@alphalink.com.au IARU Region III Conference page - www.tbsa.com.au/~wiavic/iaru

VK6 News

All radio enthusiasts, be they CB, Amateur, Short-wave Listeners or Scanner groups are advised that there will be an OPEN DAY at Wireless Hill on Saturday 23rd September 2000 from 10 am until 3 pm.

It will be BYO BBQ, for those who wish to cook, otherwise make it a picnic for the family.

The purpose of this gathering is for different radio groups to meet and chat about their hobbies. Maybe also to bring some budding amateurs closer to their dreams. This event will, we hope, become an annual social gathering. Thanks to Peter Larkin VK6HAO for his input.

Please contact Ron Brown at the address below.

Ron Brown, c/o UHF Association, W.A., P.O. Box 316, Cloverdale, 6105.

Phone 0409 887 120

Fax (08) 9207 2774.

Submitted by Peter VK6HAO,

5/8 Wave

"A few years ago the VK5 Council asked Michael Gell VK5ZLC to arrange a tour of the ABC complex at Collinswood. It was very successful and enjoyed by all who attended.

The Council has now asked Michael to arrange a tour of the ABC Transmitting centres at Mt Lofty and Pimpala to take place on normal meeting nights October 24th and November 28th this year. It is also on the cards that a further visit to ABC Collinswood can be arranged in the new year. Please contact Michael Gell Phone (08) 8294 6906 if you would like to go on one of these tours..

M. Gell VK5ZLC

VK7 QRM

There is open warfare in our Southern (Hobart) branch. And it's not just spasmodic - it's a weekly battle!!. Every Thursday night you see amateurs charging all over the city hunting the elusive fox with the fox trying their best not to be caught. As I write comes reports that the fox positioned itself in the middle of a vast crowd welcoming the Olympic torch. At this point our intrepid web-page editor, Robert, VK7RB with his offsider VK7DG are leading followed VERY closely by VK7FB, Mike's posse. It's deadly serious stuff !

The film "Frequency" opened in Hobart with Southern branch members manning an information table in the Theatre foyer. The theatre management was very impressed.

Rex, VK7MO is having a great time experimenting with "Wobble visual frequency shift keyed C.W." on 144Megs. Apparently odd stuff. The dots/dashes appear on the computer screen using very narrow bandwidth and signals below the noise threshold. Kingston (south of Hobart) to Moe in Victoria is the longest distance covered as yet. Rex is the guest speaker at the Northern Branch's meeting in September and with that intriguing mouthful of a subject a good attendance is assured.

The Northwest branch is targeting the Lions and Rotary Clubs in their quest for new members. The 40 to 60 year olds, they reason, have financial stability - home paid for - kids off their hands - and retirement to look forward to. Institute members will be addressing hopefully all the Lions and Rotary clubs on the coast in the next couple of months.

Cheers for now. Ron, VK7RN.

DX Notes

Ross Christie, VK3WAC
19 Browns Road, Montrose 3765, Vic.
Email Vk3wac@aol.com

As I mentioned last month my transceiver has developed a fault and has been sent off for repair so I have had to fall back to my old faithful FT101ZD. While my main rig is off for repair I have taken the opportunity to do a bit of maintenance on my antenna system and also to install a new ∂/4 vertical and some radials for the 40 metre band. I could not layout as many radials as is recommended in the various antenna handbooks (120), but I managed to get six laid out in straight lines at various angles from each other from the base. Vertical antennas are more susceptible to noise than their horizontal counterparts, so I am not expecting any miracles in performance. I'll operate on 40 metres for a while and try and compare the performance of the vertical to my G5RV and I'll let you know how it compares.

The NOAA Space Environment Center reported that the Boulder sunspot number reached 401 on July 20th. This is the first time during the current solar cycle that the index broke the 400 mark. Such a large value is rare. During most 11-year solar cycles, the Boulder sunspot number will exceed 400 on no more than a few days. Perhaps the cycle has now reached its peak and from now on the sunspot numbers will begin to diminish. From my point of view, I cannot say that DX has improved markedly these last couple of years. Certainly, checking back in my logbook, there was more European DX on the 10metre band a couple of years ago than there is now at the peak of the current cycle.

The prime DX bands have been pretty quiet again at my QTH and there has been little in the way of DX. I did manage to work CO2JD in Havana, Cuba on 20 metres who was buried under a pile-up of JA's. Hopefully others have been more fortunate in working DX than I have this month.

The DX

5R MADAGASCAR. Ken, AD6KA, plans to arrive in early September and operate until the 27th of September. He has not yet been assigned a callsign, however Patrick, 5R8EW, has jumped in to help out. His activity is expected to be on 10, 15 and 20 metres SSB with some PSK31, CW and RTTY. He will take with him a TS-940, TS-430, AL80A amp and use a Cushcraft R-7000 vertical. If space is available, Ken will try to put up some antennas for the low bands. Most of the operation will take place from the capital Antananarivo. During his trip Ken hopes to activate Nosy Be Island (IOTA AF-057). He can be contacted on email: ad6ka@hotmail.com

5A Vladimir, UY5ZZ reports that George, UY0MF will be signing UY0MF/5A from near Tripoli "during 2000". George prefers to operate on the 17 and 15 metre bands only. QSL via UX5MZ.

5B Dez, G0DEZ will be in Cyprus for the next three years until 2003. He hopes to obtain a 5B4 and ZC4 licences very soon, but for now he is using 5B4/G0DEZ. QSL via G0DEZ, whose address is: Dez Watson, 12 Chadswell Heights, Lichfield, Staffs WS13 6BH, England. [TNX 5B4/G0DEZ]

5B40 CYPRUS. Attention Prefix Hunters. The 59(9) DX Report states Cyprus amateurs may use the 5B40 prefix until the 30th of November. The special prefix is to celebrate 40 years of the Republic of Cyprus.

A9 BAHRAIN. Gus, KH2/K4SXT, has closed down his activities from Nimitz Hill, Guam. He will be active from A9 again in September. Gus has a preference for the low frequency bands, especially 160 metres.

AX8 AUSTRALIA. Steve, AX8AM, will be operating as AX8AM, mainly on CW, from Darwin Northern Territory until the 2nd of November. He has been spotted on 20 metres CW as early as 0630z and as late as 1300z. Also check 40 metres around 1230z. QSL via VK8AM, Steve Salvia, 1 Elliott Point, Larrakeyah, NT 0820, Australia.

D2 ANGOLA. Hossam, SU1HM, is now active as SU1HM/D2 from Luanda, the capital of Angola. He can be found every evening on or around 14160 kHz (+/- QRM) on SSB. Hossam begins operating around 2300z. QSL direct via Hossam El Shenawy, 16 El Daher Square, Cairo 11271, Egypt.

E4 Arie, 4X6UO reports that Gunter, OE1GZA will be active as E4/OE1GZA from Ramallah on an almost regular basis from now on. QSL to Gunter Zwickle, c/o SICT, P.O. Box 1133, Ramallah, Palestine.

FM Gerard, F2JD will be active, on CW and SSB, as FM/F2JD from the island of Martinique (NA-107) for 4 months beginning early September. If he has the opportunity, operation from other Caribbean islands might take place. [TNX F6AJA]

HO1PANAMA. Operators Wil/DJ7AA, Manfred/DK1BT and Tina/DL6MYL will be active as HO1A from the 16th of September until the 1st of October. The primary purpose of their DXpedition is to participate in the CQWW DX RTTY Contest. However, they plan to be active before and after the contest on all HF bands. Panama is really not a rare country but the team wishes to be active on the WARC and low bands on CW and RTTY which are still very much in demand. For this reason, they will concentrate mainly on these modes and bands. They will pay special attention, particularly on the low bands, to Europe and Asia. For more details and information visit their Web site at: http://www.qsl.net/ho1a/

HR HONDURAS. A group from Spain will be active from here from the 17th to the 25th of September. Activity will take place on all HF bands, SSB, CW and RTTY. One of the tasks the group has set themselves is to install 9 new digipeaters. The Spanish team will consist of 6 OM's and 1 YL. They will

work in conjunction with the "Radio Club de Tegucigalpa". This will be more than a simple DXpedition. Although the members are all experienced Dxpeditioners, they also have the skills and know-how to work with TNCs, antennas, Transceivers, Eproms , etc. Operation will be from two HF stations, 24 hours a day. Currently callsigns have not yet been issued but the team has requested HQ1R, and is still awaiting the local authority's answer.

M0RAA/VP9 Operator Seiji Fukushima will be on the air from the 21st till the 26th of September. QSL via JH6VLF. Email to s.fukushima@ee.ucl.ac.uk.

Hans, VK4/HE9RFF has sent me a note informing me that he will be off the air for a bit while he reorganises his shack and included a list of stations logged over the past few weeks.

Hans also sent along a couple of interesting snippets of info,

- KB0VE/AM (aeronautical mobile) in a Boeing 757 over Colorado on a flight to Las Cegas working VK3MW. Signals were excellent on 14254kHz at 05:55 UTC.
- SP5AUC is a Polish diplomat in Vietnam operating as 3W7CW. He operates CW only and those who work him can QSL via POB 11, 02-800 Warszawa, Poland.
- The QSL manager for TX0DX has been quick off the mark with the Dxpeditions QSL cards, Hans has received his after only a 3 month wait, very good going indeed. He sent his card out on the 23rd of March and he had his TX0DX card in his hands on the 28th of June. He says he has had a few quick responses recently, 9U5D replied within a month and T77C within 3 months. Congratulations on three good contact Hans.

Brian, VK4LV has also sent in a list of stations that he managed to work during June and July.

June			July		
Mode	Band	Call	Mode	Band	Call
CW	15	TI3TLS	CW	12	7P8AA
	20	9A10C (QSL via 9A7K)		15	7P8AA
	20	CO2JR		15	OM2000
	40	RA0LOM/0		17	7P8AA
SSB	12	ZS5LB		20	J75KG
	20	4W6GH		20	3A/OH2TA
	20	FR5FD		20	V51AS
	20	ZD7HH	SSB	15	A25NL (via JA6NK)
	20	V51E		15	7A32AR
	20	9A4A		20	7P8AA
	20	TX8JNN		20	KL7/W6IXP
				20	1A0KM

IOTA Activity

NA-072 HP, Panama. Wil/DJ7AA, Manfred/DK1BT and Tina/DL6MYL will operate as HO1A from Contadora Island, Panama (NA-072) between the 16th of September and the 1st of October. They will concentrate on CW and RTTY and on the WARC and low bands and will participate in the CQ/RJ WW DX RTTY Contest on from the 23rd and 24th of September. QSL is via DL6MYL. The home page for the expedition is at http://www.qsl.net/ho1a/ [TNX DJ7AA]

EU-012 The GM7V Multi-Multi team will be operational as GS2MP from Shetland (a separate multiplier from GM) for the CQ WW Phone Contest in October 2000. For more details, visit the Web page http://www.gm7v.com

VK8AN Dan, will be joined by VK8DK, Len, and VK8TM, Terry, in a trip to a couple of new IOTA locations in September (Australia's springtime). The operation will take the ops to Browse Island from 1st to 5th of September and Cassini Island from the 7th to the 11th September. Both of these islands will be new IOTA locations (OC-NEW). Callsigns will be announced soon. QSL via VK4AAR, A. Roocroft, POBox 421, Gatton 4343, Australia. Once all the requirements have been met, the reference numbers will be announced, early in the operation.

Mode	Freq. kHz	UTC	Call	QSL
CW	21025	0040	V63KQ	
	18071	0215	4K9C	Bor, Box 315, Moscow 103062 Russia
	14003	0440	JY9NX	via JH7FQK
	14005	1300	BV9C	
	14010	0615	HB0/DA1WA	
SSB	14150	0520	ZK1AXU	via PA3AXU
	14183	0500	KX2J	
	14193	0700	TI1Z	via TI4ZM
	14195	0440	JY8TT	
	14200	0500	8P6FU	

Special Events

Look for the special event station SN600UJ to be active from the 20th of July until 20th of October. The station will be celebrating the 600th anniversary of the re-founding of "Jagiellonian University" in Cracow. The station is expected to operate on all bands CW, SSB and RTTY. QSL via SP9PKZ [TNX SP9GKM].

SI9, SWEDEN. Another one for the prefix hunters. In conjunction with "King Chulalongkorn Day", the new "Visiting Station in Sweden", SI9AM, will officially be opened on the 19th of July around 0900-1000z at the permanent QTH Utanede, near the King Chulalongkorn Memorial Building (Grid Locator is JP82iw). Special HF activities will take place until 1700z on the 23rd of July. QSL via SM3CVM, bureau or CBA. Operation after the 23rd of July will be open to visiting operators who will be welcome to use SI9AM. The prefix is very rare and SI9AM is the only station in Sweden using the SI9 prefix! For more information, send an Email to si9am@qsl.net or check the Web page at http://www.qsl.net/si9am

DXpeditions

AX9YL - YL DXpedition to Norfolk Island. A multi-national team of YL operators from 7 countries will be active on both SSB and CW from Norfolk Island from 5th - 12th October next. The special callsign was obtained by the WIA Victoria for this trip, so QSL will be via the VK3 Bureau or direct to VK3DYL, QTHR, with return postage and SAE.

KH5 & KH5K, Kingman Reef and Palmyra Atoll. The Kingman-Palmyra DX Group will activate both of these rare ones, Kingman Reef (KH5K) and Palmyra Atoll (KH5) this year. Both prefixes are high on the 'most wanted list' so keep your ears open. Activity will take place in several operations during the northern summer and autumn. The islands are located approx. 1600km south of Hawaii, Palmyra is privately owned and is currently in the process of being sold. The group plan to complete the AR activities with a large operation planned for Kingman Reef sometime in October with activity will be on all bands.

Members of the GACW (Grupo Argentino de CW) are planning an expedition to the Argentine Antarctic Base of Vicecomodoro Marambio (WABA LU-03) located on Seymour Island in the Joinville group (AN-013). Hector, LU6UO, an Antarctic veteran, will be one of the ops. Exact dates for this operation have not yet been determined, but it is expected after September. A special callsign has been requested.

ZD9ZM Tristan da Cunha. Bob Henderson, 5B4AGN/G3ZEM, is planning to begin his activities on Tristan da Cunha on 5th September. If his plans pan out, he will depart Cape Town on 31st of August and arrive on Tristan on 4th of September and be on the air as ZD9ZM on the 5th. All his equipment has been forwarded to rendezvous with the MV SA Agulhas at Cape Town, South Africa. He will be using Cushcraft A3S and A3WS yagis on 20 metres and above, a Titanex V160S vertical for 160 – 40 m and a dipole is planned for 30m. He has a Kenwood TS870 driving a 1kW amplifier as his main rig with an Alinco DX70TH as a reserve and for checking 6m. His operating will be mostly CW and will be operating a +2kHz split, frequencies ending in 3 will be favoured (e.g transmitting on 14003 receiving 2kHz up). Some RTTY activity will take place if he gets a chance and will be using a HAL DXP38 with a PC running the popular WF1B software. Departure from Tristan da Cunha is on the 25th September. QSL is via William G McDowell, K4CIA, 13208 Norwood Road, Raleigh, NC 27614-9134, USA. If you intend to send a QSL direct then be sure to include an SAE with adequate return postage. Cards can also be handled via the bureau in the normal way or requested via Email to k4cia@mindspring.com.

The WIA
Callbook
2001
OUT SOON!

QSL Routes

AX9YL Gwen Tilson, VK3DYL, 3 Gould Court, Mt Waverley, Victoria, 3149,Australia.

XX9AU Cheang Vai Ip, XX9AU reports that "P.O. Box 8005, Macau" can be used also for sending cards to other XX9 stations. He is the "POB Manager" and will forward cards to the appropriate individual.

3A2ARM A.R.M., P.O. Box 2, MC 98001, Monaco Cedex

5H3RK Ralph Karhammar, P.O. Box 9274, Dar es Salaam, Tanzania

5H5A Box 167, Iringa, TANZANIA

5X4CFr. Sebastiano Bianchi, P.O.Box 43, Lira, Uganda

A22HH P.O. Box 13, Maun, Botswana

A47RS P.O. Box 981, Muscat 113, Sultanate of Oman

DL7VRO Fritz Bergner, Sterndamm 199, D-12487 Berlin, Germany

E21EIC Champ C. Muangamphun, P.O. Box 1090 Kasetsart, Bangkok 10903, Thailand

IS0JMA Roberto Alaimo, P.O. Box 41, 07026 Olbia - SS, Italy

PS8DX Raimundo Jose Junior, Rua Cinegrafista Marques 1145, Ininga,
64049-510 Teresina-PI, Brazil

PY2ZY P.O. Box 45436, Sao Paulo-SP, 00479-970, Brazil

V51AS Frank Steinhauser, P. O. Box 2516, Swakopmund, Namibia

XW2A P.O. Box 2659, Vientiane, Laos

Round up

The DXCC has announced a special DXCC certificate to celebrate the new millenium. Amateurs who work 100 countries in the year 2000 will be eligible for the certificate. No QSL cards will be required for confirmation but a certified log must be submitted.

Some 6 and 30 metre news from India. Jose Jacob, VU2JOS, reports that Indian amateurs have been given permission to use 10100 – 10150 kHz and the spot frequencies 50.350 and 50.550 MHz from the 1st of August until the 31st of December 2000.

If you are looking for information on a DX callsign from the recent past, give me a call. I have amassed a large number of DX news-sheets that contain a lot of details that were out of date before it reached me. I have them all archived on my hard-disk and searching for a call should be relatively easy.

Well that's it for this month. Hopefully my rig will be back from repair soon and I can get back on the air and work some DX. If you work some interesting DX or a rare station, please, drop me a line so I can include it in the column. I'd like to know what I've missed on the bands, so would many others!

Sources

Finally, thanks go to the everyone for the items of DX news, including special thanks to the following people and organisations, Gwen, VK3DYL, Hans, VK4/HE9RFF, Brian, VK4LV, F6AJA The OPDX Bulletin, 425 DX News and The Daily DX.

ar

NOTE: In the August edition of AR, acknowledgement of the source of the list of stations participating in the 'International Lighthouse/ Lightship Weekend' was inadvertantly omitted. The list was compiled by Bernie McClenny W3UR, who is the author of *The Daily DX News Bulletin*. The list was printed with the kind permission of Bernie McClenny W3UR.

AMSAT Australia

Bill Magnusson VK3JT
RMB 1627 Milawa Vic 3678 Email vk3jt@amsat.org

The Trend Towards Higher Speed Downloads

The launch of UoSat-12, now known as UoSat-Oscar-36 (UO-36) in April 1999 saw a number of 'firsts' for satellites carrying amateur radio equipment. UO-36 is an amateur radio satellite in the sense that it is the latest in the series of educational and scientific satellites from the University of Surrey in England and it has down links and command facilities in the amateur radio satellite bands. From the outset the Surrey group have put a great deal of emphasis on the scientific and educational applications of their spacecraft. That was their initial purpose and it's still high on their agenda. We are fortunate indeed that Martin Sweeting, G3YJO who headed up the program, saw in the early days, several advantages in making the UoSats "amateur radio satellites".

This decision has meant that amateur radio satellite operators have been able to take part in the march-of-technology that has been associated with the UoSats. It also meant that many schools and colleges were able to elicit the help of local amateur radio operators to use the satellite telemetry for educational purposes. The Surrey team have also benefited from the large number of "beta-testers" out there in amateur-radio-land.

So Martin's original idea to include amateur radio satellite operators in the team turned out to be a resounding success all round. CCD earth-imaging cameras have long been a feature of the UoSat program. UoSat-1 was their first satellite and it became known as UoSat-Oscar-9 or UO-9 to amateur radio operators when its beacon was turned on in the 2 metre amateur band. UO-9 carried a CCD camera into space back in 1981. It was a ground-breaking effort. CCD cameras had not reached the public domain at that time.

Decoding and display of the images was a daunting task. Home computers of the day were mostly monochrome, CP-M devices. Routines and programs often had to be keyed in by hand as hard drives and even floppie drives were something of a luxury. Pictures were printed in strips on thermal paper and joined together to get the final image. I know of operators who hold those early pictures very dear and still consider them to be among their greatest achievements.

The images were rudimentary by modern standards but the effort required to retrieve them was monumental. UO-9 received so much acclaim that it became the forerunner of a stream of more sophisticated educational satellites and many more CCD imaging projects on a host of different Oscar platforms. Indeed it seems these days that no amateur radio satellite is complete without an imaging experiment.

As CCD chips became more capable, with ever increasing pixel counts, inevitably the final image files became larger. You can't get something for

The AMSAT organisation

AMSAT (Amateur Radio Satellite Corporation) is a worldwide organisation with its roots in the USA. Its origin can be traced back to 1958, just a year after the launch of Sputnik-1. Since that time AMSAT members have been involved in the design, building, launching, commissioning, upkeep and of course, the day-to-day use of amateur radio communication satellites. The parent body is AMSAT-NA (North America) and many other countries have similar special interest groups operating.

AMSAT-Australia

Our local organisation is known as AMSAT-VK. The National Co-ordinator is Graham Ratcliff VK5AGR.

Membership of AMSAT-Australia.

AMSAT-Australia operates an open membership system. No formal application is necessary and no membership fees apply. From time to time new software, firmware and hardware is developed and distributed through AMSAT-VK channels. Write to the co-ordinator to express your interest or pop up on the HF net.

AMSAT-Australia HF net

The AMSAT-Australia net meets formally on the second Sunday evening of the month. During the winter months in South Australia (end of March until the end of October) the net meets on 3.685 MHz +/- QRM at an official start time 1000utc with early check-ins at 0945utc. During the summer months when daylight saving is in operation in South Australia (end of October until end of March) the net meets on 7.068 MHz +/- QRM at an official start time of 0900utc with early check-ins at 0845utc. The times and frequencies have been chosen as the best compromise for an Australia-wide net taking into consideration seasonal propagation changes and the various state summer time variations. The net is open to all amateurs, beginners or experienced who have an interest in amateur radio satellites. Help and information for beginners in particular, no matter how trivial, is freely and cheerfully available on this net.

The AMSAT Journal

An excellent bi-monthly journal is available with formal membership of AMSAT-NA. It contains details of practical projects and ranges over all aspects of amateur radio satellite operations. As of 01Jul00 the cost of AMSAT-NA annual membership will be U$45 payable to AMSAT-NA 850 Sligo Ave, Silver Spring, MD 20910-4702 U.S.A. or you can phone, fax or email your subscription using your credit card. The phone number is 0011-1-301-589-6062, the FAX number is 0011-1-301-608-3410 and the email address is martha@amsat.org

All Communications regarding any matters mentioned above should be addressed to:

AMSAT-Australia.
GPO Box 2141, Adelaide, SA. 5001.
email, vk5agr@amsat.org

nothing. Better resolution results in larger image files, like it or not. It wasn't long before this began to pose a problem as the larger the file, the longer it takes to download and even the longest low-earth-orbit satellite passes rarely last more than 18 –20 minutes or so.

The Surrey satellites have long been using a standard download speed of 9600 baud. This has proven to be quite satisfactory for normal satellite BBS, personal mail and even satgate work where files up to 100k – 200k in length are commonplace. Such files can usually be downloaded in one pass.

But things are changing and it's a different story these days. The newer CCDs can produce original 'off-the-chip' files which are many megabytes long. New compression algorithms have been devised to minimise the file size that is transmitted by the satellites but even so, the file size from the high resolution cameras is such that it would take several passes to successfully download each file using 9600 baud down links.

As a result, UO-36, the latest from the Surrey stable, was designed with experimental high speed download capability. Currently the 38.4 kilobaud (38k4) downlink is turned on.

"Great", I hear you say. Yes it is great. It solves the problem of download time but like most innovations, it imposes more stringent requirements somewhere else along the line. In this case, on the ground station. Years ago when downlink baud rates went up from 400 to 1200 and then to 9600 we found that it was no longer possible to feed the audio signal into the microphone socket as the bandwidth of the audio section of amateur receivers was far too narrow for the job. Even using direct Frequency Modulation of the carrier rather than Audio Frequency Shift Keying (AFSK) was not sufficient at 9600 baud to allow the data to be fed in via the microphone socket. That meant modifications to the transceiver.

Although a number of manufacturers claimed to address this problem it was not until very recently that one could buy a transceiver off the shelf that would cope with 9600 baud satellite work. The late model Icom 821 and more recently the Yaesu 847 still have the field to themselves. Most operators undertook modifications to their transceivers which included tapping points at the balanced modulator and discriminator sections for the input and output of the data. Even the ubiquitous Yaesu FT-736-R which found such favour with satellite buffs needed this treatment to cope with 9600 baud data from the satellites.

So now we come to the current 'fly-in-the-ointment'. Increasing the baud rate to 38k4 imposes requirements that cannot be met in the same way as the 9600 baud solution. The IF bandwidth of amateur radio transceivers isn't wide enough, nor do they have the pass-band shape to cope with the passage of 38k4 data. In the world of commerce, specially designed data transceivers are available but these are very specialised and expensive.

Another problem is that they are designed for point to point operation and satellite operation introduces an additional problem in compensating for doppler shift. Since most amateur ground stations use automatic doppler correction these days it would be very desirable to retain the front-end of your transceiver for this purpose. Using a fixed frequency data receiver could make it difficult to implement auto-tuning.

A German company, SYMEK (with whom I have no connection other than being a satisfied customer) have come up with a solution. They produce data transceivers and it so happens that at least one of the company Principals has an interest in amateur radio satellites. They have introduced a product into their range which neatly addresses the 38k4 situation. They call it an IFD board. Essentially it is the IF strip of one of their data receivers. It is inserted into the signal path prior to the normal IF strip in your transceiver and introduces a wide band, flat topped response to suit the higher speed data. Output to the 38k4 modem is taken directly from the IFD board.

I recently installed one of these boards in my aging Icom IC-471 transceiver. The installation involves identifying and cutting a track on the RF-YGR board and soldering in two thin co-axial cables which route the signal out and through the IFD board and back again. Normal operation of the transceiver is not affected. Of course you need a modem capable of working at or above 38k4.

If you are using a G3RUH modem in conjuction with a packet TNC, as many present digisat operators do, it is possible to do some mods to achieve 38k4 operation. I am gathering information on these mods for a future column. I believe however that 38k4 is about as far as you can stretch this mod and any future increases in download speed would mean a new modem altogether. For this reason I chose one of the range of high speed modems available from SYMEK.

My modifications went smoothly and the station is now happily downloading megabytes of data on each UO-36 satellite pass including individual picture files of well over a megabyte each. The download rate is quite startling. My connection to the internet ISP (theoretically) allows 56k download rates.

But the proof of any pudding is in the eating. In practice I can download at the rate of about one megabyte every 10 - 12 minutes. Some will better this no doubt but mine is a pretty typical installation and that's all I need at present as I rarely ever 'surf-the-net' and email is my main concern.

It seems to compare favourably with other internet friends who have a 'normal' ISP account. By comparison working with PacSat Broadcast Protocol rather than TCP/IP as on the net, I can achieve a download rate of up to one megabyte every 4.2 minutes from UO-36. I have a friend who maintains a dedicated high speed line for internet use. His main area of interest is real-time video-conferencing so he has installed the best high speed link available to facilitate that. He can download a megabyte every 15 seconds or so and regularly downloads 180-200 megabytes in an hour.

Now to be sure the satellite isn't in the sky all the time and the system lacks the "instant gratification" of the net, but it's not all that bad. It's even caused a few of the friendly knockers among my computer-buff friends to re-assess their situation. With the expected increase to 68k7 and higher, the satellite connection will be far more capable than an average internet connection and exceeded by only the fastest and most expensive dedicated lines (and it's all happening on Amateur Radio!!).

I certainly feel the effort was well worthwhile even though it is imposing strains on my equally ancient computer to adequately store and process the image files. Oh well ... more upgrades on the horizon. It seems that there is always a "weakest link" at the ground

station every step of the way in this satellite business. But that just serves to keep you on your toes! Even higher baud rates are planned, so the future of amateur radio satellite imaging seems certain to remain a source of fascination for more and more operators around the world.

The current state of the art in the Surrey satellites produces images which are stunning. Their narrow angle cameras have an on-the-ground pixel size of some 10 metres square. Compare this with the NOAA HRPT pixel size of about 0.9 km square, remembering of course that the NOAAs are designed to take cloud pictures and make no claim to great ground detail. On UO-36 pictures taken over large metropolitan areas, streets and individual properties are discernible. In images of coastal areas, piers and marinas and larger boats become visible.

Many of these pictures looks more like high altitude aerial photographs than satellite images. The multi-spectral images allow almost natural colouring to be achieved by marrying together three images from different parts of the light spectrum. This feature would have been quite impossible using even 9600 baud download rates. It involves downloading three quite large files and their associated thumbnail images to reconstruct the final picture.

Colin Hurst VK5HI has been a key figure in this sequence of events. His editing and display programs have become the 'industry standard' in amateur radio satellite imaging. Colin has spent countless hours developing his programs to the stage where they are so intuitive and reliable that we almost take them for granted. In fact we would all be lost without them. We owe people like Colin and Chris and Martin and the team at Surrey a huge debt of gratitude for the marvellous educational tools that these satellites are ... and have been since the very early days.

Many teachers, myself included used UO-9 and UO-11 telemetry downloads back in the early 1980s in the teaching of lab electronics and maths. Things have certainly come a long way since that time but the Surrey satellites are still playing an important role in schools and colleges and in University education. They have been used by humanitarian aid agencies, supporting technical and medical services, working with highly portable, compact ground stations capable of being taken into remote, unserviced problem areas. Surrey, through its commercial arm Surrey Satellite Technology Limited (SSTL) has pioneered this form of affordable satellite communication. Its UoSat series has spawned a very successful venture called "technology transfer" where students from overseas universities go to Surrey and become involved in the design and construction of their own UoSat-based communication satellite.

Back in their own country they arrange for launching and commissioning and establish the control facilities. The idea being that these people will go on to form the backbone of their country's emerging communication industry. (See "Advance News" announcement below).

The SYMEK company maintains a site, www.symek.com on the world-wide-web. Information regarding their modems and IFD board is available from that source. It would be great to see more VK/ZL callsigns in the broadcast queue of UO-36. Plenty of help is available for those contemplating a move to the high speed down links. They appear to be the way of the future. More next month.

Advance News of More Digital Satellites for the Amateur Radio Bands

News is just to hand from the Amsat News Service at the time of writing, of more imminent launches of experimental satellites carrying digital amateur radio packages. Hopefully these packages will be in the commissioning stages when you read this column.

New Saudi Amateur Radio Satellites

The first Amateur Radio Satellites from the Kingdom of Saudi Arabia are presently being built by the space research Institute at the King Abdulaziz City for Science and Technology in Riyadh. Tentatively set for launch August 25, 2000, these satellites will be capable of 9k6 digital store and forward operation (Pacsat Broadcast Protocol compatible) as well as FM bent pipe mode.

These satellites will use the following downlink frequencies. Uplinks are in the VHF Band and will be announced after commissioning.

SAUDISAT-1A
SAUDISAT-1B
Downlink 437.075 MHz
436.775 MHz

New Malasian Amateur Radio Satellite

The first Malaysian Amateur satellite 'TIUNGSAT - 1' is to be launched on 25th August, 2000 from Baikonur Cosmodrome, Khazakstan which is the same launch as Saudisat, above.

Details of 'TIUNGSAT - 1' (named after the malaysian bird "Myna")

Data transmission will be in FM and FSK modes at a data baud rate of 9K6, 38K4, and 76K8.

Tiungsat-1 will have RF links as follows,

Uplinks 144.460, 145.850 and 145.860 MHz.

Downlinks 437.300, 437.325, 437.350 and 437.375 MHz.

This is as as result of technology transfer collaboration between Astronautic Technology, Malasia and Surrey Satellites Technology Ltd. (SSTL), England.

Astronomy net

The Astronomical Society of Victoria has its own callsign: VK3EKH. Using that callsign, Russell Ward has been conducting an amateur radio net for hams and short wave listeners on the subject of astronomy since August 1989. The net commences each Friday evening at 10.00 est on 3.543 MHz. Russell lists astronomical news for the week and invites stations to call in. There are a few regular stations that call in each Friday and, over the years, over a hundred stations have taken part.

Many shortwave listeners enjoy listening to the net. Topics discussed range widely over the subject of astronomy and include matters of interest to amateurs such as meteor scatter propagation, sunspot an auroral activity, satellite communications and meteor showers. New stations are made most welcome.

ARDF

Jack VK3WWW
Phone: 03 9873 2459 Fax 03 9428 1589 Mobile: 0408 037 065
Email: vk3www@alphalink.com.au

"Home and Away" Fox Hunts

China 2000. During the month of September and early October many competitors attending the 10th ARDF world Championships to be held in Nanjing China, (2hrs from Shanghai) will be training very hard and making lots of equipment checks making sure the body and equipment are in top shape. Friday October 13th is arrival day but most competitors will be worn out from travelling great distances to attend, so usually, there are no activities planned for that day.

Saturday is training day, and the opening ceremony. Training for most consists of testing and tuning your 2m and 80m equipment eliminating any problems before they occur. It is customary for the Society, in this case the Chinese Radio Sports Society (CRSA) to provide test signals. For those interested in equipment and what the opposition is using, this is probably the best time to compare notes and test out some of your competitors equipment.

Following the training is the opening ceremony, this event provides a great photo opportunity with all the teams wearing team colours, and carrying their national flag. Sunday. 2m event, this is when you find out how good your preparation has been. I remember waiting to be transported to the start of an International event watching the rain come thundering down. I was carrying a plastic bag to cover the sniffer just in case, but you would be amazed how many competitors were not prepared for this situation. Many a competitor who experienced equipment failure due to water learned a hard lesson. According to an information sheet October is the best season for the competition area.

Monday is a rest day, a good chance for the cuts and scratches to heal. Usually before the first event there is a lot of tension, but once it is over friendships are much easier to make. So during the local tour planned for the rest day everyone has a great time chatting.

Tuesday. 80m, this is similar to the 2m event but should be in a different area one good thing about 80m is the size of the equipment, you don't have to lug around a large yagi. If you ever get a chance to attend a local ARDF event and all that is left for loan are 80m sniffers, don't stress for with a good sense antenna 80m dfing is much easier than 2m. Tuesday evening is the Closing Ceremony followed by a Banquet, and providing you have not over indulged too much Wednesday is departure day. I have been informed members of the VK team will stay on for a few extra days for some sight seeing.

I am sure you will all be cheering for the Australian team.

Ballarat Hamfest. On Saturday October 28th 2000 there will be an ARDF event. This event will loosely follow International rules, and by doing this, give those interested in the sport a chance to experience real ARDF competition. Listen to your local broadcast for more information or visit: http://www1.tpgi.com.au/users/ddi/barg/barg.htm

Since writing my last column I have received a few requests for sniffer engines and antenna designs, in the next article I will list some designs and contact details for information.

In closing I would like to thank Luke Gillett (SWL) from the VK3YQN foxhunt team who provided me with the excellent digital images taken during the Australian Foxhunting Championships held in Mount Gambier, and published in the July edition of AR.

BF

Charles McKenzie Couglan XCO

Charles Coughlin joined the WIA NSW in 1912. When World War 1 broke our in 1914 he enlisted in the army. At wars end he stayed in the Army for a further two years in England. On his return to Australia he did not pursue the hobby of Wireless Experimenter(Amateur Radio).

His membership badge is shown in the attached picture and the original is in the WIA NSW Museum. Charles was born on 16 – 2 – 1894 and died in 1966.

Note - Callsign XCO would now be VK2CO

A. Jopp VK2AXT VK2 Librarian and Curator of the VK2 Museum. PO Box 883 Parramatta NSW 2124.

Awards

John Kelleher VK3DP
Federal Awards Officer
4 Brook Crescent, Box Hill South Vic 3128, (03) 9889 8393

Listening around the HF bands lately has been a real pleasure. On one day alone, over a period of three hours, I heard over 70 stations worldwide. This must be a real boon to DXers and award chasers

In response to requests for award information on certain DX countries, I am including those with a definite Scandinavian flavor.

Norway — WALA (Worked all LA Award)

OZ, OH, SM, LA, TF and OY applicants need 2 contacts on separate bands with 19 counties of Norway. All others must work 19 different LA/LB's at least 6 of which are north of the Arctic Circle. JW/Svalbard, JW/Bear Island, and JX/Jan Mayen count. Contacts after Jan 1 1950. SWL OK. No repeater, satellite, or crossband. GCR list and Fee of US$3.00 to :-NRRL, PO Box 21 Refstad,N-0513 Oslo 5, Norway.

The list of counties required.

A-Oslo; F-Buskerzud; L- Rogaland; V-Nord-Trondelag; JX-Jan Mayen; B-Ostfold; Z-Vestfold; R-Hordaland; W-Nordland; C-Akershus; H-Telemark; S-Sogn ag Fjordane; X-Troms; D-Hedmark; I-Aust-Adger; T-More ag Romsdal; Y-Finnmark; E-Oppland; K-Vest-Adger; U-Sor-Trondelag; JW-Svalbard/Bear

Sweden The WASM II Award

This diploma, issued by Sveriges Sandareamatorer (SSA) is available to amateurs all over the world. The Class A is for amateurs located in LA, OH, OZ and SM. The Class B is for amateurs worldwide. All contacts must have been made since Jan 1 1953. Any one of the amateur bands is allowed, and contacts to be made in CW or phone, or any combination of both. Sweden is divided into 25 different laens (or Counties) :

A-City of Stockholm, SM5 and SM0; B-Stockholm laen, SM5 and SM0; C-Uppsala, SM5; D-Sodermanlands SM5; E-Ostergotlands, SM5; F-Jonkopings, SM7; G-Kronobergs, SM7; H-Kalmar, SM7; I-Gotlands, SM1; K-Blekinge, SM7; L-Kristianstads, SM7; M-Malmohus, SM7; N-Hallands, SM6; O-Goteborgs och Bohus, SM6; P-Alvsborgs, SM6; R-Skaraborgs, SM6; S-Varmlands, SM4; T-Orebro, SM4; U-Vastmanlands, SM5; W-Kopparbergs, SM4; X-Gavleborgs, SM3; Y-Vasternorrlands, SM3; Z-Jamtlands, SM3; AC-Vasterbottens, SM2; BD-Norrbottens, SM2

Amateurs in the Class B area must submit proof of having established 2-way communication with each of the 25 laens on two different bands (50 QSL's).

Applications for the WASM II must be accompanied by a verified list of claimed stations and 7 IRC's or equivalent. QSL cards need not be sent, provided the list of claimed stations is signed by an officer of the applicant's own radio society, certifying that he has seen the cards.

Address the application and confirmation list to: -

WASM II Manager, SM6ID, Karl O. Friden, Morup 1084 311 03 Langas Sweden.

Finland The OHA Award

This award is available to all licensed amateurs. GCR rules are accepted. Contacts must have been made after June 10 1947. The fee for this award is US$3.00, unless otherwise specified. Applications should be sent to :-

SRAL Award Manager, Jukka Kovanen, Varuskunta 47 as 11, Riihimaki 31 SF-11310, Finland

Non-European applicants need contacts with 15 different OH including at least 5 OH areas on any band or combination of bands. Contacts made on 3.5 MHz will count for 2 contact points. CW, phone or mixed mode contacts counts. Minimum acceptable report is 338 RS(T).

Denmark Worked Scandinavia on CW

Applicants work 100 cw stations from 5 of the following : LA, OH, OY, OZ, TF and SM.

SWL OK. Contacts since Jan 1 1988. The award is a full colour photo of a peaceful scene of a family picnic somewhere in Scandinavia. Special sticker for QRP stations. Logbook list confirmed by two other amateurs with fee of US$7.00 to :-

Rick Meilstrup OZ5RM, Geelskovparken 12/1, DK-2380 Virum, Denmark.

Thank you for your continued support. Best 73 de John, VK3DP.

4S7RS 50 Years of Amateur Radio

Special Event Callsign Prefix To Mark The Golden Jubilee Of The Radio Society Of Sri Lanka

The Radio Society of Sri Lanka (RSSL) will be celebrating its Golden Jubilee in July 2000. To mark this event the members of the RSSL will be using a special Radio Amateur Prefix during the period July 1st 2000 to June 30th 2001.

A special Jubilee Awards Certificate would be presented to any radio ham (outside 4S7), who produces proof of 2-way contact (one or more modes, multimode/multiband) with 20 Radio Amateurs located in Sri Lanka, during the contest period.

To obtain this certificate the applicant should:

1) Submit proof of contact with required 20 contacts on different bands with certification by 2 other active hams.
2) Send to: The Awards Manager,
   The Radio Society of Sri Lanka,
   P.O.Box 907,
   Colombo,
   Sri Lanka.

With written application and 5 IRC's.

Tks es 73,
T.Adrian – 4S7PR,
Hon. Secretary,
The Radio Society of Sri Lanka.

Does the VK/ZL Contest need a revamp?

Tony Burt VK3TZ
3 Moyston Cl., Vermont South 3133

It was with dismay that I read the results of the 1999 VK/ZL contest in the May edition of AR. The commentary by the Federal Contest Coordinator, Ian, VK3DID indicated that the contest manager felt that perhaps the contest should be abandoned. This was very disheartening to me, but the number of entries from Oceania, certainly indicate that there is a distinct lack of interest. Thus, I concur that the viability of the contest is certainly in question. With the passing of each year, I am disappointed with the lack of interest that only seems to get worse.

However, I feel that it is important for the contest to continue, as I believe that it is the only truly international DX contest representing Oceania. I feel that it is important that at least one international contest is run from this continent, for contesting as well as Dxing from Oceania is suffering as a result. The attention paid to Oceania DXers by the major DXpeditions is dwindling and making it more and more difficult for Oceania DXers to achieve some of the major milestones in Dxing, such as DXCC honour roll, 5BWAZ or the new 1500 Band country DXCC award.

Therefore I suggest that the all facets of the contest should be closely scrutinised to identify why there is a lack of activity from here and abroad. Hopefully, any failings that are identified may be addressed and the event may return to its more successful past. I have identified a number of points that I feel could be used to address the current situation and hope that others may voice their thoughts, either in support or disagreement so that "our" DX contest can return to the world stage.

Awards and certificates

The contest does not really recognise any of the efforts made by international competitors or the participation of entrants from other countries within Oceania. In fact, the only awards that I know of are for the best CW entrant from VK. This is a poor state of affairs and needs to be addressed. There should be recognition for the best entrant in each category, for each of the continents, and for each country within Oceania where there is an entrant. This may only be a special certificate and a mention within the results in AR magazine but it needs to be done to acknowledge effort and success where it is due. I personally believe it is not too much for the major national organisations within Oceania to each sponsor a trophy or plaque, the cost of which should not be more than $50 or so per annum. I may even go as far to say that each division within the WIA, as well as a number of the major regional clubs, could easily afford a minor award. If the ARRL (KH6) NZART, FK, YB and one or two others, sponsored a trophy we could have the following:

Plaques

No.	Category	Sponsor
1.	Best Score Oceania SSB	WIA Federal
2.	Best Score Oceania CW	NZART
3.	Best Score Oceania Multi-Single	FK
4.	Best Score Oceania - Sprint Category SSB	YB
5.	Best Score Oceania - Sprint Category CW	KH6 (ARRL)
6.	Best Score EU - SSB	VK3 DIV WIA
7.	Best Score AS - SSB	VK2 DIV WIA
8.	Best Score NA - SSB	VK7 DIV WIA
9.	Best Score EU - CW	VK4 DIV WIA
10.	Best Score AS - CW	VK5 DIV WIA
11.	Best Score NA - CW	VK6 DIV WIA
12.	Best Score SA - SSB	Club or individual Sponsor
13.	Best Score AF- SSB	Club or Individual Sponsor
14.	Best Score SA - CW	Club or Individual Sponsor
15.	Best Score AF - CW	Club or Individual Sponsor

There should also be recognition for the best scores from each call area in VK and ZL, and if warranted YB. This may simply be a certificate and a special boxed area within the reporting of the results in AR to indicate the top scoring stations.

Multi-multi versus multi-single category

For the past couple of years, myself, VK3WWW, VK3BF and a quite a few members of the EMDRC have spent a good deal of time setting up portable antennas in a remote location, field day style, as a multi-operator entry in the SSB section of the contest. As far as I am aware, we were the only multi/multi effort in the contest. The fact that the station was not indicated as such within the results was also disappointing. Was the ZL6QH operation a Multi-multi, their scores were certainly *fantastic!*

We have certainly gone to a lot of effort to erect three beams and low band antennas, assemble multiple computers with logging, amplifiers, rotators, towers, cables, etc. I think we actually spend more time and manpower erecting the antennas and assembling the operating stations than we do on air. Our preparedness leaves a good deal to be desired, and our results are a lot poorer than many of the top single operator stations, but we are attempting to give new operators and contest novices a chance to operate with some experienced people in a quite rural spot.

However, I doubt that all the extra effort required to set up a multi-multi station is worth the effort. There is not the expertise to do it correctly, nor the interest. I think that only the crew at ZM2K have operated reasonably successfully in a multi-multi configuration from Oceania. Sure there have been other top class Oceania multi-multis but these have been manned by

European, American or Japanese crews. My point is that it would be far more appropriate to have multi-single category than a multi-multi category. How many multi-multi equipped stations in Oceania do you know about? However, I believe that there are plenty that would be suitable as a multi-single!

A category for the time poor contestor

One of the reasons I think many skilled operators, who have effective and very capable stations, do not enter contests is that they simply do not have the time to dedicate a whole weekend to a contest. And lets face it, there is far less motivation to participate if there is little hope of actually winning an event. As far as international HF contesting is concerned our contest is a short one, being only 24 hours in duration. But to be competitive an entrant must compete for much of this 24 hour period, including a distinct lack of sleep. If there was a category that allowed capable operators to compete, with a chance of winning something without tying up a whole weekend, then I believe this would result in an increase in participation rather than a decrease.

Thus, I propose that a new category be introduced that permitted entrants to submit a log with a maximum operating time of 8 hours. This would permit a couple of stints at the radio and allow the operator the luxury of structuring their operating around such things as work, family, known TVI blacktimes, meal times or whatever the operator chooses. Only entries in the 8 hour category would be judged against each other. I believe this category would make contesting a lot more fun, rather than turning contesting into a seemingly endless grind. I guess it is a bit like asking the average jogger to compete in a marathon rather than a 10km fun run. The activity is the same but more suited to the average "man on the street". Even though the thrill of winning the marathon may be far more rewarding, participating in the fun run is probably more enjoyable for the majority.

The 8 hour category may also bring a lot more strategy into the contest rather then brute power or persistence. I truly believe such a category will result in more participation and more enjoyment.

Start and Finish times

With regard to the start and finish times for the contest, I also believe that there could be an improvement here. The 6.00 pm finish on Sunday night leaves the EMDRC little time to pack up the field day station, so we start dismantling early in the afternoon. We loose operators and operating time, as well as incentive. For the ZL guys it is worse and for any Oceania stations further East it is ridiculous. I think that it would be better to schedule the contest so that the contest starts mid afternoon in Eastern VK.

It is not too late to operate from ZL, FK or 3D2 before the eyes get too heavy. At the moment these guys are starting the contest at 8.00 or 9.00 pm, not what I consider ideal, but some input from ZL and the Pacific Islands is needed. For the VK6s and YB0s the contest would start around midday on the Saturday, enough time to do the shopping in the morning and play with the kids, or a round of golf on the Sunday afternoon after the test.

Contest name and emphasis

I believe that the contest emphasis should be shifted from VK/ZL to Oceania. For this contest to be better patronised the contest must be able to attract entrants from other parts of the globe as well as Oceania. Remember that this is a HF contest, the only one that is run specifically for Oceania. We should drop the VK/ZL from the contest name and simply call it the Oceania DX contest.

To shift this emphasis to Oceania we also need to ensure that some of the other more populous countries within Oceania participate in reasonable numbers. There are literally thousands of hams in Indonesia and quite a few from the Philippines and New Caledonia. We need to address this by requesting their participation and ensuring that they feel it is their contest as well.

Bands

The last time 160m was included in the VK/ZL contest was some years ago. I think that the band was deleted from the contest when a well known, very successful and competent contestor suggested that the contest should be structured as a DX contest rather than a local contest. I agree with that sentiment but believe that at the moment we need both local and DX participation to renew the contest.

At the time, each QSO on 160m was worth 20 points per QSO as well as each prefix on that band adding a multiplier. As such, it only took a few QSOs to make quite a significant change to the final score. Perhaps the score increase was more than was warranted by the few QSOs made and the ease of making them, but I believe that the deletion of the 160m band from the contest has also contributed to the decline in interest. The rules at the time were there for all to see, read and analyse before the contest. It was not worthwhile to spend the whole contest on 160m but is was worth while to spend some time there, perhaps 20 – 30 minutes working mostly local QSOs. The winner of any contest should be not be due only to a better equipped station, greater skill or experience, but also due to a better strategy.

I therefore suggest that the 160m band be re-introduced into the contest, knowing that QSOs on this band are most likely to be Oceania to Oceania, but realising that activity on 160m should be encouraged. To ensure that the relative merit of QSOs on each band is kept reasonably fair, the points per QSO on 160m should be adjusted as described in the following section.

Oceania to Oceania QSOs

The first time I ever put in a serious effort in the VK/ZL contest was in 1994. At this time the rules included QSOs on 160m and permitted VK to VK and ZL to ZL contacts on the low bands. This made the contest part DX contest and part local contest, since the majority of QSOs on the low bands were between contest stations in the Oceania continent. The points scoring system meant that there were easy points to be made by single hop or local contacts on 160 and 80m. Each 160m contact was worth the equivalent of 20 QSOs on 20m! Whilst this points scoring system did little to encourage DX contacts during the evening, it did encourage some local activity and activity on the low bands.

In the SSB contest, there is a distinct disadvantage for VKs on 80m due to the DX window that is so narrow to permit only one station at a time. The ZLs have

a much better opportunity to work quite a few multipliers into the USA and Japan since they have a good deal of bandwidth in the DX portion of 80m.

I propose that the 160m section of the contest be re-introduced and the rules be changed to permit intra-country contacts on any band, but with the proviso that these contacts are not worth as many points as a inter-continental QSO. Since the low bands permit relatively easy contacts within the Oceania region there should be no difference between the points scored for a 3D2 to VK3 contact and the points scored for a VK6 to VK4 contact. I suggest that there be no distinction between intra country QSOs and inter-country QSOs within Oceania. My proposal for the points scoring on each band is as follows:

Band	OC to OC QSO	DX to OC QSO
160m	3	20
80m	2	10
40m	1	5
20m	1	1
15m	1	2
10m	2	3

Multipliers

Currently the multipliers for the contest are the number of prefixes worked on each band. I suggest that this be altered so that the emphasis is to work DXCC entities (countries) and the different region of the more populous countries of Japan, the USA, Russia and Canada as well as the call areas for VK, ZL and YB. For the DX the multipliers are the number of current DXCC countries from Oceania worked on each band and the number of different call areas for ZL, VK and YB.

So for Oceania stations, working a N1 is a multiplier and working a W1 or K1 is the same. Thus, there would be 334 entities plus ten multipliers from VK, ZL, YB, USA, VE, JA and UA. For non Oceania stations the multipliers are the 60 or so DXCC entities in Oceania and then multipliers from VK, ZL and YB. I have pondered using the states of the USA, provinces of VE, prefectures of JA and oblasts of UA as multipliers but the difficulty in obtaining the correct information would probably make this unworkable for all but the major contests. The "call area" multiplier is easier for the contestor as well as contest coordinator to score and administer.

This moves away from the prefix as the multiplier and places emphasis on working DXCC entities. Since the attraction to work Europe has a distinct advantage here, the additional multipliers for Japan and North America helps to alleviate this disadvantage. Thus, the Oceania contestors should pay roughly equal attention to the three major population areas.

I am tempted to suggest that multipliers for the continents of SA and AF be awarded double or perhaps triple value, to increase the time Oceania contestors spend looking towards these continents. Thus, working a ZS or a PY would increase the multiplier count by three rather than just one if a station from North America was worked. Since for most Oceania stations, the paths to these continents do not cross the equator, there should be a greater reward for working them since the non trans-equatorial paths are more difficult.

Summary

I am sure that there are more options to try. What do you think? I am keen to get your opinion via a response to AR or via email to jennyb@alphalink.com.au. The most important question is:

If these suggestions were incorporated into the "Oceania DX contest" would you participate and submit a log?

Regards,Tony, VK3TZ.

IARU/WIA Monitoring Service SUMMARY FOR JULY/2

Gordon Loveday VK4KAL,
Email: vk4kal@telstra.easymail.com.au

FREQ	DATE	UTC	EMM	DETAILS
01.823	300700	0930	J3Eu	UiBC + UiCARR. Lang U/known
03.560	2007	1105	A3E	R.Korea I.D. Pos Pyongyang
14.060	0307	0955	R7B	Uidata sigs 4 kHz wide
14.177	1007	0930>	R7B	WBD {wide Band Data} nil info
14.210	200700	1000	A3E	UiJam, R.Taipei, H2/7.105
14.2115	2007	0952	F1B	RDL Mosc Military Radio CIS
14.222	1007	1000	R7B	UiData type signals, nightly
14.230	2407	1040	A3E	H2/7.115.V of PUJIANG-Shanghai
14.245	1807	0918>	N0N	UiCarr, Nil bearing given etc
14.250	200700	0930	A3E	R.Korea Pos I.D. H5/2.85 Lo Mod
14.290	2007	0840	A3E	H2/7.145m N.Korea Pyongyang
21.435	1907	2130	A3E	R.Korea, Same Pros as 14.290
28.650	1002	2215	A3E	This Cuban Stn has not been heard since this time, so we must assume it has left our frequency. Some notes interest— JJY on 8 MHz and 10 MHz, has been issuing magnetic storm warnings for July 14 to 16 by CW ... U U U, WWV/H has more detail at 18 mins past/hr and 45 mins/hr. It would seem Cycle 23 is getting "into gear", so reception of Intruders will be unusual until condx settled down. For July, over 30 data intruders were observed, not included in summary, no point at this stage.
Late Reports				
14.100	3107	0000	J3E	YBO amateurs/CB QSO. Much QRM
14.115	3007	0620	J3E	CB type op/much QRM, 2 way net
14.120	1107	0830	J3E/1	M & F voices + Beacon
18.130	1007	1107	J3E	Non amateur ops
18.155	2607	0026	A3E	Ui stn, very weak.

David K Minchin VK5KK
Postal PO Box 789 Salisbury South Australia 5108
E-mail: tecknolt@arcom.com.au Web page: http://www.ozemail.com.au/~tecknolt
Fax +61 8 82346396 Phone NEW NUMBER 0403368066
All times are in UTC

Aurora Australis Strikes In Southern Australia

The 11th of August 2000 saw a significant Solar event resulting in Aurora's in both Northern & Southern hemispheres. While the Aurora was not as widespread as some (i.e. to more Northern areas) it certainly provided a number of contacts throughout lower VK2, 3 & VK5.

Russell VK3ZQB reports ... "Worked a heap on 2m Aurora 12/8 from 0750 to 0917 UTC. by then everyone had worked everyone else and it was down to taking turns calling CQ. Worked VK7JG 3-9 0750UTC, VK3XPD 3-9 0800UTC, VK5DK 4-9 0805UTC, VK3KEG 4-9 0819UTC, VK5DJ 4-5 0834UTC, VK3TLW 4-9 0839UTC, VK3YY 4-9 0840UTC, VK3ZLS 4-9 0913UTC, VK3AEF 4-9 0914UTC, VK5LP 4-7 0915UTC, VK3EK 4-9 0917UTC. Heard a VK2 in the dog pile at one stage but did not work him. There were many others there as well VK7ZPB is one I heard. 1200UTC all seems quiet, can't hear any signs even on the beacons... A good turn-up for a otherwise dull day." ... VK3ZQB

Doug VK3UM reports on the Aurora but also some of the more finer details of Auroral propagation as well as some tips towards more effective operation ... " Thanks to Trevor VK3KEG I was able to get on and enjoy an extended Aurora opening commencing about 1800 hours EST 12/8/2000. It lasted to well after 2100 when I 'gave it away'. Given the length of the opening I was able to observe the Doppler shifts and relationships to distance and beam headings, something I had wished to do for ages.

At the outset I wish to make it quite clear that the Doppler offset frequencies I quote may not be exact as assumptions of the transmit frequency, in some instances was not confirmed. However on the other hand most were confirmed either verbally or by listening to the stations fundamental transmit frequency. I was using a Yaesu FT-847 at the time and the measurements given below were very easy to tabulate.

The Aurora coverage was also interesting in that it did not seem to extend much further west than Millicent (VK5DJ) and further south than 'Launceston ' VK7JG & VK7XR, north/east to Nimmitabel VK2TWR and probably north to myself? We were aware that Adelaide, Sydney and Canberra were alerted but nothing from them (nothing workable from Metro Adelaide .. VK5KK) was heard from these areas at this QTH. This is a little different to many past openings I have participated in over the years, when the coverage area extended greater than that witnessed on 12/10/00.

Now to some observations. At 1800 the single peak (in the past I have noted multiple peaks) was about 160° and with time moved through 180° to about 195° and slowly returned to about 165° at 2100. It was interesting to watch the shift in Doppler by turning the beam. For example listening to Russell VK3ZQB (who was 9+) from beam headings of 160-190°, the Doppler varied from 235- 375 Hz. Thus beam heading (as has been known for ages) has a bearing on Doppler off set. On 144MHz this is not too important but on 432MHz (or 3 times 144MHz) it takes on more serious implications.

Any way this is what I observed for what it's worth. VK3KEG 4/8 +225 ... VK3ZQB 4/9 +235 ... VK5DK 4/9 +525 ... VK5DJ 3/5 +568 ... VK7JG 4/9 +465 ... VK2TWR 4/5 +280 VK3EK 4/8 +410 ... VK3TLW 4/8 +430 ... VK3AEF 4/7 +500 ... VK3DMW 4/5 +440 ... VK7XR 4/9 +323.

As I mentioned above I could further vary the Doppler shift by greater than 150 Hz by shifting the beam heading.

One may postulate why this is so. I have always used the analogy of 'looking up at a waterfall'. The moving water coming towards you relates to the positive Doppler shift and from where you are standing relates to its magnitude.

What does this all mean? Well to anyone coming across an Aurora signal for a first time, with its 'rough distorted raspy note' there are a couple of fundamental things you can do to make it more easy to work stations.

1. Turn your beam south
2. Work cw! It is the most efficient communication for this propagation mode!
3. Switch to Tx Rx split VFO or use your RIT
4. Do not try to transmit on the received station resolved frequency. (You will end up chasing yourselves in circles)
5. Assume the transmitting station is transmitting on an even kHz increment.
6. The received station will always be higher in frequency to what he is transmitting on. This will vary, but set your RIT to about +450 Hz as a good starting point.
7. Speak slowly, use correct phonetics, don't yell.. you are distorted enough as it is! and spread out in 5 / 10 kHz intervals. Everyone cramming on the 'call frequency' will not help. Its not a contest ... enjoy the experience and observe the unusual characteristics of the signal. Call a friend interstate ... and spread the word.

It will happen more and more frequently in the coming months ... we just have to be alert. Leave you beam south, put you receiver on scan (if you can) and include a 'smattering of beacons'. It can happen anytime day or night and you don't need a lot of power

to be successful! I am looking forward to getting the dish commissioned and getting back on 70cms. There should have been QSO's on 70cms given the strength of the opening." ...Doug VK3UM

The Fate Of 420 – 430 MHz In VK

In this column, nearly six months ago, details were published regarding plans, in WA, by the Emergency Services to get primary usage of the 420 – 430 MHz portion of the 70cm Amateur band. At this time I made mention of negotiations being held with the primary user of this segment, the Defence Department of Australia. The following extract from a letter to the WIA from Geoff Hutchins, Manager, Spectrum Planning Team, ACA, is sadly, self-explanatory.

"I am writing to advise the WIA of recent developments in the radio frequency band 420 - 430 MHz in the Perth area. As you are probably already aware, the Australian Radio frequency Spectrum Plan currently allocates this band domestically to the Radiolocation service on a primary basis, and to the amateur, fixed and mobile services on a secondary basis. Footnote AUS11 of the Spectrum Plan specifies that assignments to users other than the Department of Defence or the Australian Defence Force will not normally be authorised for the radiolocation service in this band.

The Western Australia Police Service, on behalf of the Government of Western Australia including the State emergency services, has been negotiating with the Department of Defence regarding access to the band 420 - 430 MHz for an integrated trunked land mobile network supporting these essential and emergency services in the greater Perth area. The ACA, as spectrum regulator, has been facilitating these negotiations. The trunked radio system, known as ES-CADCOM, is expected to commence operation later this year. Given the nature of these services, it will be essential to ensure that they are not subject to interference from amateur In order to give appropriate regulatory weight to this development, the ACA intends to adjust the domestic allocation arrangements for this band in the Spectrum Plan in due course. Most likely this would involve promoting the mobile service to primary status, in a manner consistent with the ITU-R Radio Regulations Table of Allocations for ITU-R Region 3; possible regulatory options have, however, not yet been fully explored."

It is expected that other subordinate legislation such as the Radiocommunications Licence Conditions (Amateur Licence) Determination would also need adjustment.

Preliminary studies indicate that transmissions from amateur systems within 200 km of Perth may cause interference to the proposed WA Government trunked land mobile system. Amateur receivers in this area may also experience interference. I note that one amateur television repeater and eight amateur links are currently licensed in this frequency band within this area. I will be writing to the licensees of these systems to inform them of these developments and the expected implications.

I should mention also that the ACA is experiencing increasing pressure from a number of essential and emergency services organisations in the eastern States of Australia that aspire to access this spectrum for similar purposes to that in Western Australia. Noting these developments, we would appreciate meeting with the WIA for discussions on migration implications for amateur services, on regulatory options, and on ways in which the WIA could assist."

Wally VK6KZ reports ... "have a look at http://www.radio.gov.uk/busunit/research/lpdguide/lowpower.htm dealing with the issues and highlights emerging problems. It is worth looking at..." ...Wally VK6KZ. More on this matter next month.

6 Metres Still Hanging In

Chris VK4DFE reports ... "I worked JA1VOK on voice (50.110), at 2238Z on 21/7 (i.e.: Sat am unusually early at 8:38 am local), S6 to S9. I run 100W into a 5/8 vertical; QTH is Maleny on Blackall Ranges North of Brisbane. VK4JSR also wkd him at 5/9. Small opening only lasted about 5-10 mins." ... Chris, VK4DFE

Further North, John VK4FNQ Charters Towers, has been reporting almost daily propagation to the North (JA) and on a few occasions to KH6 (Hawaii) On 20 Jul 2000, VK4FNQ worked @ 0855 NH6YK, 2327 JA8CAR QM13 and 2330 JH2SMW PM85LA all on 50 MHz.

Microwave Primer Part Four: 2.4 & 3.4 GHz

I have grouped both of these bands together as they have many similarities in equipment requirements and propagation. Not withstanding, significant segments of both bands, very recently, have been or are in the process of being removed from the Amateur service. Both moves by the ACA have required the weak signal portions to be re-allocated. As a result, weak signal activity has declined with a large portion of equipment still being tuned to the old segments.

2.4 GHz is by far the more popular of the two, with a degree of FM ATV activity on the two allocated channels (2415 & 2439 MHz). The availability of ex MDS converters and ISM band data equipment makes it somewhat trivial to get something Wideband going on this band! 2.4 GHz has also been a popular satellite downlink band for a number of years. With Phase 3D being orbited soon; the 2401 MHz segment will see new activity. Converters for 2.4 GHz are not that difficult to construct, with several designs being still available.

3.4 GHz is perhaps the least used of all of our Microwave bands, excepting 24 GHz and above. This is a global problem stemming partly from the lack of ex commercial equipment in adjacent bands, the technological jump that existed in multiplier technology up until recently and perhaps that the band is not universally allocated around the globe. Putting all that in perspective, today it is no harder to get equipment going on 3.4 GHz than it is 2.4 GHz. Almost all the same devices used on 2.4 work and give the same power on 3.4 GHz.

3.4 GHz, despite losing 100 MHz, still has 4 times the allocated bandwidth of 2.4 GHz making it far more suited to FM ATV operation. some cities already have congestion on the shared 2.4 GHz ISM bands with only two channels!

Transverters represent the most popular method of Narrowband Transceiving. Designs for both bands use similar techniques. The new weak signal segments start at 2403 & 3401 MHz. CW, SSB & Beacon segments run in typical fashion from this point. If you use a 144 – 148 MHz IF, you now need a 94.000

MHz crystal for 2403 (IF=147 MHz) and a 90.444 MHz crystal for 3401 (IF=145 MHz). If you use an IC202 tied to 144 MHz you will need to adjust these crystal frequencies to suit. 432 MHz is also suitable as an IF for both bands. It is handy having atleast a few 432 MHz IF's for portable multiband operation .. enabling crossband contacts on at least a few pairs of bands.

For Power amplification, the most common devices used are the Mitsubishi MGF090* series. The MGF0907 will provide 10 watts on 2.4 GHz with reduced gain on 3.4 GHz. A better choice (although lower power) for both bands is the MGF0906 with 6 watts output and 13 db gain on 2.4 GHz (about 8db on 3.4 GHz).

Antennas are perhaps the only area of significant difference between the two bands. 2.4 GHz is typically the highest band parasitic element yagis (loop or planar) are used. The most popular choice is the USA designed Loop yagi's like the 52 element "Super Looper" on a 2.4 metre length boom. You can also use the DL6WU design. By the time you get to 3.4 GHz, tolerances make yagi manufacture laborious. A 600mm dish will give around 20db of gain for far less effort, even on 2.4 GHz a 600mm dish is a useful alternative only being marginally worse than a well built 52 element loop yagi.

Both 2.4 & 3.4 GHz experience very similar effects from tropospheric ducting. Evaporation Ducting has limited effect (refer to last months article) on either of the bands. Greenery does start to take its toll on both bands with 3.4 GHz suffering a small but measurable impediment over 2.4 GHz. By "Rule of thumb", from a few years of using both bands, 3.4 GHz experiences a 4 – 5 db deficit in path loss after all other factors are considered. Even in Tropo paths, there does seem to be a bias towards 2.4 GHz. At some point between 3.4 & 5.7 GHz this downward trend reverses. 5.7 GHz can outperform both bands even under only slightly above average conditions. This is due to other Propagation factors e.g. Evaporation and other low altitude enhancements having significant effects at these higher frequencies. 3.4 GHz being near this seeming "crossroad" might be another factor in its low popularity.

Summary: If you are contemplating getting going on one or the other of 2.4 or 3.4 GHz bands what should you do?? For serious portable or home weak signal, either band is suitable. For Wideband operation, like data or ATV, I would tend towards 3.4 GHz as it has 200 MHz of usable spectrum; the upper part can be covered by unmodified C-band Satellite down converters. 2.4 GHz has more equipment available, albeit potentially unusable in some parts of the country due to the proliferation of unlicensed ISM & Spread spectrum devices.

Next Month 5.7 GHz, the band of surprises.

VK2TK's "DX-pedition on 11 & 12 Aug 2000

The following is an extract from a report by John VK2TK.... "This expedition started with 2TK & 2KU meeting at the 2KU QTH in the Blue Mountains for a test setup. Arrival at Mt Lambie revealed the need to enter a farm, and seeing no signs threatening to break our knees or nuke our grandchildren, we ventured briskly past the homestead to a hill full of radio towers, and quickly drove up and around these to the trig station where the takeoff east was excellent.

Opening the doors of the Landcruiser proved a serious mistake, because someone had obviously left the fridge door open on that mountain for some time. Additional layers of clothing and numb-fingered later we put up the mast less the 2m yagi (the halo was enough). Easy contacts were made back to 2ZAB on 70 & 23cm. A rapid packup ensued given the appearance of an official looking vehicle before awkward questions were asked.

At 5:30am next morning we really learned what "wandering about in a fog" actually meant. We wandered around for over a couple of hours by which time we were decidedly less foggy and had to settle for high ground north of Mt Ulandra with no good takeoff south. It was well after 9am local time when we finally got on the air and contacted Barry, Rej and the omnipresent Gordon.

Then on to QF34. An abortive trip up the Tumut road revealed terrain much like the Mt Ulandra area, so we pressed on and turned off the Hume onto the Tumbarumba road and into the Kyeamba state forest towards a very promising hill containing - you guessed it - radio towers. Fortunately there was a slight suggestion of a track up the hill beside the fence which brought us up a narrow ridge to the towers and a fabulous, gob smacking near 360 degree view of the surrounding country. The halo-to-Gordon test quickly confirmed this would be OK. As the 2KU & 2TK logs tell, lots of contacts, new grid squares for a number of people.

Mt Lambie Lat 33deg 28.38min S, Long 149deg 59.25min E, Locator QF46xm 11/8/00 0425 VK2ZAB 144.1MHz (using halo only), 0451 VK2ZAB 432.160MHz 59, 59, 0453 VK2ZAB 1296.160MHz 56, 57

North of Mt Ulandra Lat 34deg 50.29min S Long 147deg 58.90min E Locator QF35xd 11/8/00 2325 VK3BJM/p (Katoomba) 144.200MHz 56, 56, 2326 VK2ZAB 144.2MHz 55, 55, 2328 VK2MP 144.200MHz 59, 59, 2335 VK2MP 432.160MHz 59, 59, 2339 VK2ZAB 432.160MHz 55, 53, 0003 VK2ZAB 1296.160 41, 41

Kyeamba State Forest Area Lat 35deg 31.57min S Long 147deg 35.55min E Locator QF34tl 12/8/00 at 0413 VK3BJM/p (Katoomba) 144.100MHz 59, 57 12/8 0414 VK2ZAB 144.100MHz 59, 57, 0421 VK3BJM/p (Katoomba) 432.160MHz 51, 41, 0422 VK2ZAB 432.160MHz 51, 52, 0452 VK2ZAB 1296.160MHz 41, 41, 0455 VK2MP 432.160MHz 52, 55, 0459 VK3XPD 144.180MHz 53, 53, 0509 VK3KWA 432.160MHz 52, 53, 0544 VK3BDL 144.1 MHz 52, 52, 0550 VK3WDE 144.100MHz 55, 55, 0555 VK2CZ 144.1Hz 55, 54

Equipment Used: 144MHz IC821H & Gasfet Preamp, 100W, 6 element 10dBd yagi, 432MHz IC821H 30W 11 element yagi and 1296MHz IC1271E 5W 22 element 16dBd yagi "... John VK2TK

In Closing

The RSGB reports that Indian amateurs have permission to use 50.350 and 50.500MHz (single frequencies only) till 31/12/00. Hmmm spot frequencies, good news along way from 50.110MHz!! Lets hope it results in some activity as India is an easy path from many parts of VK2,3,4,5,6 & 8.

Please note that I have a new Phone number at the top of the page. The old number will redirect for some months until the changeover is complete. I'll leave you with this thought ... "You can lead a cow up a flight of stairs but never down ..."

Till next month

73's David VK5KK

Repeater Link

Will McGhie VK6UU
21 Waterloo Cr Lesmurdie 6076
VK6UU@VK6BBR
will2@omen.net.au

Cold and Cows

Already running behind with this months Repeater Link, today, Sunday was at least free to put the article together. No sooner had I finished breakfast and the phone rang to say I was rostered on and where was I? A simple oversight of not reading my roster meant a quick shower and off to work. Having spent the previous Saturday crouched in a four wheel drive on the top of a windswept hill in almost continues rain, with the temperature peaking at 12 degrees, Sunday was to be a well earned day off. The Saturday was a country outside live broadcast from the town of Toodyay, 100 kilometres from Perth, and I was one of two people providing the first hop on an 8 GHz dual link back to the city. What A day, surrounded by cows, rain, clouds and freezing temperatures it was not all bad, but I could have done without the rain and the cold. However the views were fantastic. Microwave links can be a refreshing day out.

Digital Television

Like it or not we are headed towards the next revolution in television, Digital Television (DTV). The ABC is flat out learning about the new technology and rebuilding all of its facilities in order to be at least, ready for the introduction of Digital Television, in about 6 months time.

Training of its staff is required, so an understanding of Digital Television is grasped by all. As a consequence I have just spent two days attending a basic introduction to Digital Television and perhaps what little I picked up could be of interest to amateurs. However don't take this article as necessarily being accurate in all respects as my understanding of these basics could well be wrong from time to time.

Digital Television is really good, compared to our present analogue system. If you have seen a video DVD on a good analogue television you have seen Digital Television. The first thing you notice about DTV is the lack of noise on the picture, some 10 dB less. Our present analogue Television has a vision signal to noise at best of 40dB. I say at best, as this assumes you have a strong signal from the television transmitter with little or no ghosting.

Digital Television does have a signal to noise. There is noise in a digital signal that is intrinsic and it is directly related to the number of bits that is chosen. Digital Television is 8 bit. This means there are 256 levels or possible differences, be they brightness levels and /or colour shades. These 256 levels define the signal to noise as 1:256 as a voltage ratio. This equates to a 50dB signal to noise. 10 bit has a 1:1024 voltage ratio resulting in a 60 dB vision signal to noise, but is just too expensive, and is only used in master editing if it can be afforded. High quality colour cameras produce an analogue output with a signal to noise of better than 60dB. As soon as this signal is digitised, 10 dB of noise is added to the picture. However the 50dB signal to noise is very good and just can't bee seen. This is an interesting point, Digital Television is not noise free, it just a long way down, and much better than our existing analogue system. However why is there noise in a digital system?

A to D

Noise is generated in the analogue to digital converter (A to D converter). The A to D converter takes the analogue signal, which has infinite variations of brightness and colour and converts this levels to one of the 256 digital levels available in an 8 bit system. The problem facing the A to D converter is what to do with all those signal levels that fall in between one of the 256 levels available to it. Say a voltage level that is in between 103 and 104, 103.5. The A to D can't make up its mind and in a random way makes the 103.5, 103 one time and 104 the next. This indecision generates noise and this noise is called quantisation noise. All analogue to digital converters generate this noise. The more bits available means the more digital levels available and hence the more accurate conversion of the differing analogue voltage levels to a close approximation of this level as a fixed digital equivalent. And as a result the indecision between these smaller voltage levels result in smaller quantisation noise.

You may well now have the impression that digital creates problems, and it does. However from camera to television receiver, digital out performs analogue by a great degree. Analogue is able to represent more accurately the infinite level differences in a television picture. Digital on the other hand restricts these infinite variations of colour and brightness to 256. This means for example, you can only have 256 shades of red and 256 levels of grey scale. On a computer monitor having a setting of 256 colour (8bit) results in rather middle of the road colour reproduction of colour pictures (photographs). Change the computers colour setting to 16 or 24 bit and there are now millions of possible colours and grey scale levels and the colour pictures looks great. Digital Television is able to get around this limitation to a degree, by first generally being a moving picture which masks this limitation, and by alternating colour differences between pixels when an exact pixel colour can not be reproduced. A particular red is made up by the nearest plus and minus red colour available from the 256 shades of red.

A lot of cleaver thought has gone into tricking the eye to some degree. There is no need to send information that the eye responds to poorly. Only

information that creates a good looking picture needs to sent. If the eye says it looks good then it does.

Compression

Without digital compression there would be no Digital Television. Something like 95% of the raw digital television picture is not transmitted! Digital compression is a process of removing information. The digital television signal is made up of blocks of 12 complete pictures, only two of which are complete pictures. The other pictures are made up of any differences between successive pictures. If, as in most situations, there is little change between successive pictures, only the changes are transmitted. This is an oversimplification of the 12 sequence block of pictures as these differences are devided into what are called spacial and temporal differences. Spacial means parts of the picture occupying the same space and temporal meaning the same brightness and colour. It is not possible to go into the detail here, due in part to my scant knowledge of the subject. Why not only send one original picture and then from that point on only the differences? Why do we have to keep sending an update of what the current picture is? The reason is digital television makes mistakes. Errors creep in all the time all along the transmission path. These errors can be fairly high, and with 50 frames (pictures) being sent every second these errors mount up. After a short time the resulting picture would not be anything like what it currently should be, as errors compound errors. It is interesting to note that before any error correction and checking takes place in a digital signal, the error rate can be as high as one in every ten bits! Lots of cleaver error checking and correction gets this error rate down to one in several million.

What happens when the error rate is too high, due to lack of signal or interference? The digital picture starts to break up in random squares and may freeze from time to time. The reason that the effect is random over the entire picture, rather than just in the area where the errors occur is due to the way the digital signal is transmitted. Digital Television is broken up into small square areas and sent in a random fashion. In other words the picture is not sent sequentially from top left to bottom right, but in a random fashion. It may be that a small square part of the picture in the centre is sent first followed by a similar square from the bottom left. Mind numbing is it not, and we have only started. The complexity of Digital Television is a marvel to mankind's ingenuity.

On and On

When I started to write this I thought half a page would give the reader a little information about digital Television, but there is so much more and the dead line for this article is way overdue, so there will have to be a part two and perhaps a part three. One final point is, Digital Television is transmitted using Packet Radio, yes good old Packet Radio, and would you believe the Television transmitter puts out 8,000 separate carriers in its 7 MHz band space. Yep 8,000 carriers, more next month.

He who expecteth little

By Ian Godsil VK3DID

How easy it is to become caught up in new-fangled things and leave the activities that have supported us, sometimes for many years.

At the end of January I discovered what it was like to be able to "surf the Net" and send e-mails FROM HOME. I had done it from the local Library for two years or so, so roaming the Net for specific things was not new; but being able to do it at any time in my own shack/office was.

So far so good –but it only took a week for me to realize that my number one radio love —CW – was falling aside. Oh well, I thought, its harder now to get a contact on CW anyway and especially QRP CW that I have always loved for the challenge of making the contact, as well as communicating via a means other than speech.

On Saturday, 5 February, my wife and I had been for a walk along our local beach and around 9 p.m. I thought "I'll just have a listen around the bands for a few minutes". I had no expectations of any type, just the satisfaction of hearing the band noise and possibly some CW. I expected little or nothing!

I am a lover of the 12 metre band and often listen across it for any sounds. This summer there has been precious little on that band except noise (QRN). Imagine my surprise and joy when, on tuning to 24.900 MHz, I heard CW! A quick tune of the band revealed one Japanese SSB station calling. But imagine my unbridled exhilaration on returning to the CW signal to discover it was a 4S7 in Sri Lanka. He was busy working Germans.

Now, I have never worked into India or Sri Lanka, although I have occasionally heard stations from those parts. Good operators don't intrude them selves into QSOs not for their area, but I wanted that 4S7! Carefully I called several times and –JOY OF JOYS – was rewarded with a contact. I make no apology, but I was ecstatic. However, I consider myself sufficiently in control not to let my feelings swamp my reading of CW signals, especially if those signals are not "wall to wall". The contact was made – can you feel my joy radiating from the page? — But bearing in mind "Do or die", "Nothing ventured nothing gained", etc, I asked the Sri Lankan operator if he could read me on QRP? With one flick of a switch I went to 100 mW and lo! There was little variation in my signal. What a beauty! Oh what a marvel! Whooppee! I expected nothing and came away with a new country and an opportunity for a CW Operators' Club Award when I get his QSL card.

How many of you can get a feeling like that from SWLing (for which I have the healthiest respect), or the Internet (which I also respect, but suspect is a great time-waster)?

Come on VKs; let's hear you on the air. There are operators in other countries that actually LIKE to work us "down unders" and who often wonder if we have abandoned Amateur Radio here. What about doing your bit and in the process giving someone else, as well as yourself, a thrill? There's nothing quite like it!

Pounding Brass

S.P. Smith VK2SPS
4/6 Taranto Rd
Marsfield NSW 2122
(H) 02 9876 8264
(M) 0419 602 520

PB Retrospective

Here is the final part of previous columns that have appeared in issues of Pounding Brass, continuing from Issue 40 and concluding with this months issue.

Issue	Month	Year	Article Contents
41	Dec	96	Not included
42	Jan	97	QRP Plus Transceiver
43	Feb	97	MFJ-486 Grand Master
44	Mar	97	Morse Programs
45	Apr	97	Instant Morse CD-Rom by the R.S.G.B.
46	May	97	Operating Practices
47	June	97	CW Abbreviations
48	July	97	Photos of Australian Keys
49	Aug	97	Buying a Key via 2nd hand market
50	Sep	97	PT 2 Buying a Key
51	Oct	97	Book Review "Encyclopedia of Telegraphy" by William Maver
52	Nov	97	Cassette Motor Control by Derek O'Brien
53	Dec	97	New Keys from Vibroplex
54	Jan	98	Photos of Australian Keys PT 2
55	Feb	98	Local/International Radio Contests
56	Mar	98	What is "Zero Beat"
57	Apr	98	Morse Examinations
58	May	98	Sending, Morse Examinations
59	Jun	98	Oleg Bezzoubov UA4FBP, High Speed Telegraph Champion
60	Jul	98	Operating Techniques for the Beginner
61	Aug	98	Photo's American Semi-Auto Keys
62	Sep	98	Cryptic Codes
63	Oct	98	Bandwidth of a CW Signal by George VK3TES
64	Nov	98	Gravity Cells
65	Dec	98	Happy Christmas
66	Jan	99	Book Review "The Telegraph" by Lewis Coe
67	Feb	99	No Issue
68	Mar	99	No Issue
69	Apr	99	History of the Paddle (repeated demand)
by			
70	May	99	QRP Transmitter
71	June	99	
72	July	99	
73	Aug	99	Radio Awards from the CW Operators QRP Club (Milli Watts / KM Award)
74	Sep	99	Radio Society of Germany & Austria
75	Oct	99	Photos – Military Air Force Keys as used by the British & Commonwealth Nations
76	Nov	99	Photos of Keys
77	Dec	99	Millennium Bug from Vibroplex
78	Jan	00	)
79	Feb	00	) Lost in mail
80	Mar	00	)
81	Apr	00	PT 2 Learning Morse Code
82	May	00	Rhythmic Sounds (Not Dots & Dashes)
83	Jun	00	Early Forms of Communications
84	Jul	00	PT 1 Pounding Brass Articles
85	Aug	00	PT 2 Pounding Brass Articles

Until next month, Best of Wishes
Stephen P. Smith
VK2SPS

Silent Keys

The WIA regrets to announce the recent passing of:-

J G (Jim)	Cowan	VK2ZC
A T C	Butters	VK3LAA
E (Arthur)	Walz	VK4AW
(Bert)	Newman	VK4NA
G A (George)	Moss	VK6GM

Farewell to a Life Member George Moss VK6GM (1904 – 2000)

George Moss VK6GM a Life Member of the VK6 Division of the WIA became a Silent Key on 15th July 2000 just 6 weeks before his 97th birthday.

A Memorial Service was held on the 18th July attended by many members of the Radio Amateur Old Timers Club.

George's first employment was as a piano tuner but his interest in radio started as early as 1923 with a home built crystal receiver and a 10 shilling experimenter's license. He joined the WIA in 1925 and was issued the callsign A6GM in 1926. This allowed him to play records on air before the first radio station 6WF commenced transmission.

Prewar he joined Nicholsons and became Manager of their Radio Department whilst during the war he was seconded as a radio trade instructor at the Perth Technical College.

Although he retired as a lecturer from the West Australian Institute of Technology in his 80's he still conducted laboratory sessions there.

In his younger days Georges other hobby was hydroplaning where he won many speedboat races at the RFBYC.

George was a Fellow of the Institution of Radio and Electronic Engineers Australia and bestowed Life Membership of the WIA in 1965 having held the offices of Secretary and President. It is with sorrow that we note the passing of George Moss VK6GM and the Institute offers it's sincere condolences to his widow Betty and son and daughter Ray and Lorelie

Tony Savory VK6TS
VK6 Councillor and Broadcast Officer

Vale Bert Newman VK4NA

Big Bert as I always knew him (6'4" in his socks and as wide as a standard door frame) finally succumbed to a long illness on 20th January 2000.

The younger generation of hams probably will not know him – nor will some OTs. He mostly soft-pedaled his way through life. A sort of gentle giant, who's electronic know-how no one questioned. I knew him more than half a century ago, in that era spoken of as the 'good old PMG days' where we both worked.

In spite of his low-key approach to AR, he, nevertheless, was a complete Amateur. In fact the term 'over qualified' would have been quite appropriate. He worked DX, socialised in the Nets but his main love was 'home brewing' electronics. Here he excelled. Anything Bert put together worked at maximum efficiency. It is heart warming to see a couple of pieces of his handwork, which still grace my shack.

By vocation Bert was a PMG 'Trunk Test Technician' and none kept the vital heart beat of communication working more smoothly that he.

Bert was a long time WIA member, a home brewer with many articles published and an improver.

Two sons, Bruce and Warren and a daughter, Susan, survive him. He will be sadly missed.

Bert was a neighbour of mine and I too will miss the momentary darkening of my shack as he entered.

Via Con Dios old mate.

Alan Shawsmith VK4SS

Arthur Edward Walz VK4AW

Arthur was born in 1908 and died on 15th May 2000. He was a Life member of WIAQ and one of the last pioneers of Wireless.

First licenced in 1924 as OA4AW, later VK4AW, his WIAQ membership goes back more than 70 years. This puts him in a very select company. There was much more to VK4AW than years of membership. In the 75 years of WIAQ, Arthur was the longest serving President 1933 to 1940. This was when, well-attended, monthly meetings were held in the clubrooms, 1st Floor, Celtic Chambers. This was the period of peak Amateur activity before WWII and there was no shortage of aspirants for Council positions.

Arthur also had the distinction of being a persistent VHF researcher. This was when VHF was considered useless for communication, but not for the 5Mx Hams. VK4AW with a small group of like-minded Amateurs was able to demonstrate the possibilities of VHF. Chapter 5 of "HYCLON DAYS" gives more information on 5Mx research conducted by VK4AW. His prophetic speech given at the WIAQ 8th Annual Dinner to 100 guests is worth reading.

Arthur began his working life as a plumber, but very soon saw the possibilities of 'wireless' and began to trade as 'Walz Radio Eqpt'. He never looked back.

VK4AW is survived by his wife Hazel, 3 sons and a daughter. Almost all his mate have become SKs. Those who are left will remember a slim, quietly spoken man, who carried of the position of President of WIAQ with quiet dignity. A man who chose his words carefully.

For me, I take this opportunity to pay my respects to an OTer who never failed to assist me with information only he possessed, when I was researching 'Hyclon Days'

The WIAQ should see him as one of the last pioneers, a genuine pioneer.

Rest in Peace Arthur, I am one who knows you earned it.

Alan Shawsmith VK4SS

AR Over To You

Note 1 Views expressed in letters are those of the authors and do not necessarily represent the policy of the WIA.
2. Some of the letters have been shortened to allow more letters to be published.

Re Promoting Amateur Radio and improving AR magazine

I read with interest Michael's letter (AR July 2000) about problems promoting Amateur Radio. With respect, I'd suggest that if his efforts were limited to putting forward ideas, then I'm not surprised these efforts came to naught.

I frequently receive ideas that various people believe that *"the WIA"* should act upon. When I ask whether they are willing to take an active role in implementing their idea, they usually shy away, mumbling that it's *"the WIA"* that should do it.

Most people don't make the connection between *"the WIA"* implementing their great idea, and the individual volunteer taking yet more time away from his friends, family, hobby, and other interests to do the work. In my experience, most volunteers are already overloaded doing multiple jobs because too many others are unwilling to do just one.

Many well-intentioned individuals say, *"the WIA should..."*, but very few add *"... and I want to help make it happen."*

I think Michael was heroically optimistic to even dream that 50 Amateurs could be organised for the Marion Centre event. Getting even a dozen Amateurs to commit to any activity is a major undertaking, but 50 is on a par with herding cats!

One would think that, in a hobby demographically dominated by retirees, one would find a few people with some spare time on their hands...

Moving on to Michael's comments about Amateur Radio magazine: if Michael is so interested in vintage radio and "golden age" valve home brewing, then what on earth prevents him from submitting regular articles on these topics himself?! How about just one?

Remember: when you point a finger at someone else, you have three more pointing back at yourself!

73 Richard Murnane VK2SKY

Who Writes AR ?

Regarding Michael Gell's letter, I meant to comment that I thought you might have put in an editor's comment to the effect that articles in AR are volunteer efforts contributed by members, rather than commission from professional authors. Michael seems to think that it's "the WIA's" fault that "they" are not coughing up for material more to his taste.

73 Richard VK2SKY

Re: Compulsory CW testing

Well it's finally happening, that is, the end is in sight for the compulsory testing in CW for HF access. It's about time too! Now I'm not saying that we should do away with Morse and I'm not saying that I'll never use Morse. What I am saying is that it is too stupid for words to maintain this archaic anachronism as a compulsory entry to our great hobby.

Let us examine a few parallels from academia. It wasn't all that long ago that Latin was a compulsory prerequisite for entry into law and medicine. I can remember the howls of indignation when this requirement was dropped. I don't think that either profession has suffered from not having to carry this burden. I seem to remember that Latin, or at least a foreign language, was a prerequisite for entry into Architecture yet the very necessary subject of Technical Drawing was not recognised by the Architecture Faculties as a prerequisite. To maintain that Morse is necessary to be a 'full' amateur is as sensible as saying that we should return to spark transmitters.

Arguments are advanced from the pro-Morse fraternity that 10WPM never kept anyone out of getting a full call. What rubbish! There are plenty of amateurs with Novice licences who just cannot spare the study time or else have an auditory problem or just have a sheer nerve problem at examination time. Using a key is a lot different scenario from just doing a written test.

It is said that keeping Morse keeps the 'riff-raff' from our hobby. What arrogance! Who gave these dictators the right to pass judgement on others? Anyway, we still have rigorous testing in the necessary subjects of theory and regulations. These tests will ensure that people who wish to become amateurs will value their call when gained.

I don't know how many times I have mentioned that I am an amateur and inevitably get asked about entry requirements. I am now used to the incredulous look of amazement when I mention that Morse is a requirement.

I know that my own case that I found the theory and regulations rigorous but not too onerous and sufficiently interesting to maintain my interest. I estimate that I could have passed full theory and regulations in about 4 to 8 month's study BUT it took me two lousy years to get 10WPM passed. Is it any wonder that a lot of amateurs heave the key in the river the minute that they pass?

I have visited shacks of full Morse supporters and looked for their key or bug. It is inevitably stuffed away in a cupboard or under a pile of books or else they sheepishly admit to sending computerised Morse. What hypocrisy!

As a side issue; the full Morse brigade often bewail about the so called lack of amateurs willing to 'home brew'. Well what about the many hams who build their own antennas, GDO's, ATU's, QRP transceivers, power supplies, linear amplifiers, SHF experiments, Internet linking of VHF repeaters etc? We cannot live in the past so it's no use moaning and groaning about the lack of valve circuits etc. If those people wish to be stuck in a time warp that's their problem; it sure isn't mine.

Ian Gray VK2IGS

The Language We Use

In recent issues of Amateur Radio there has been a "push" to show amateur radio off to the public. It seems to me there needs to be some determined changes to make the hobby more understandable. From time to time I have visitors or neighbours drop in, and have taken the

opportunity to demonstrate my hobby. After listening for a while they ask: "What was all that about?" How about we as Australians set a new standard and set a new standard and speak in understandable language! Q codes are for CW operations, so leave it at that and don't use them on voice channels. The incessant use of QSL for example on voice when the speaker really means "over" or "Romeo" (roger) or "Okay" is most annoying. I had a visitor who runs a communications business and he remarked "After listening to that, no wonder a ham is half a pig's ass!"

Let us communicate like other services; in simple plain language. Civil; aviation voice circuits seem to do very well using regular everyday speech.

Lets all try it!

Victor Kitney, Bunbury

Re: Morse Code and Amateur Radio

The Morse code comments by W P McCarthy VK4WMC in open forum of *Amateur Radio* July 2000 are commendable and his/her thoughts and words about CW get my full support.

A new comer to Amateur Radio but a veteran Morsecodian I think some people are being too hard on Morse code when they continue to demote it the way they do. There is a place in Amateur radio both for Morse code and SSB etc. Could the keyword in the debate be envy? Or is it that there are too many self doubting radio people? I think that if more positive people gave Morse code a chance everything would happen on cue. Bingo!

After listening to and working with many Morse code amateur operators on the radio bands, I know with certainty that there is a place for CW in the HAM world. Morse code is not defunct nor is it outdated because it is an enjoyable challenge to so many radio amateurs worldwide.

Doubtless, the campaign to get rid of CW will continue, but thankfully none of us can forecast the future. I wonder where Morse code will be "25 years down the wire".

I also wonder why anyone would eat tripe when they can have fillet steak.

Allan Madigan VK2OA

Another Survey

Radio and Communications has conducted another survey. Another commercial venture and a good opportunity to knock CW ? It has all been done before. R&C editorials have been angling for years for a reduction in CW speed, as far back as Radio and Hobbies. The WIA has had to work within the International Regulations. I know that entry requirements will have to change but why lower standards.? The State and Federal WIA is now in the hands of a new generation and I understand their leaning to lowering the licence speed requirement. But I ask you "What can you do with 5wpm ?" Even the Services recognise it is useless. So what next ? No code – No CW on tranceivers ? The operative word is standards. You need them to get an Amateur Licence. It should not be given away on a Wheetie packet. Food for thought !

G W. Lanyon VK2AGL

Contests

The comment in the "Contests" column that the "RST" should be dropped has provoked me to write this.

What is a Contest? It is a test of skill and the end results are judged on ability to read/hear the call and report sent to you correctly. A letter or figure wrong in your log can cause havoc to your final score. In world wide contests such as the IARU, you have to read the call, rst and zone correctly. In our own VK/ZL we have to log the call, RST and serial number correctly. That is part of the skill. The other parts of the skill include the ability to hear and read very weak stations, or select one of say five stations calling you, correctly. You need to know which band you should be on at a given time and to know what direction your antenna should be pointing. Short path or Long path. Personally I would like to see contest reports expanded to include more cyphers such as perhaps the operators age, number of years licenced, etc.. The Europenian Contest requires a length of cyphers referencing previous QSO's. A simple mis-reading of these causes points to be lost. For those that use computer logging, such as myself, when a station sends 579 instead of 599, it means attention on the keyboard. If I just recorded 599 and not 579 I am deemed to lose points with a good contest examiner that has complete cross log checking facilities. So, keept the RST, but send a honest report and get those hot shots, big scoring contesters, to think and not just sit back and record calls and serial numbers.

Now to those who complain about contests cluttering up the bands. Firstly, there is not a contest every weekend that effects us in Australia. In fact probably only 6 weekends of the year effect both CW and the Phone sections. There is plenty of spectrum for everyone. No one amateur "owns" a frequency, or band.

Perhaps we should remind those whingers that Amateur Radio is a fraternity, where understanding and tolerance is a major part of the mandate. If contests upset you for say 25 days of the year; surely those who are not participating would be prepared to offer this time to those interested in contests. It leaves 340 days for the non-contester to have the bands all to themselves.

If you cannot tolerate this, I would respectfully suggest you try CB or the internet chat lines.

Or, next time you hear a world wide contest, test your own skills. See how many countries you can contact in say two hours, or even try for a DXCC. If it's the ARRL contest, see how long it takes you to log every U.S. State. (In fact Contest organisors could encourage more activity if they offered awards for these achievements).

Whatever you feel about contests, be tolerant. It costs nothing and shows that you are a worthy and understanding member of our great fraternity.

David A. Pilley VK2AYD
(50 years plus as a Radio Amateur).

Towers

In reply to the article in Amateur Radio August 2000 under 'Towers - Builders Beware," I wish to express that I have been professional in the engineering work for 40 years. I will not stand for the unbelievable story you have written about the tower in question.

The design of the tower was mine as an Engineer but the structural drawing was done by two Civil Engineers at the cost of time and materials approximately $30,000 - the most costly tower for Amateur Radio use.

You have turned two Civil Engineers and two Council Engineers in disgrace of their profession, to me they are the best. I will make copy of the letter and will send it to them. I am very upset, I can't believe that our radio magazine can do that to their own members - defammation of character.

The drawings are within my QTH.

B G Witjes VK4BTF

HF Predictions

by Evan Jarman VK3ANI
34 Alandale Court Blackburn Vic 3130

These graphs show the predicted diurnal variation of key frequencies for the nominated circuits.

These frequencies as identified in the legend are:-

- Upper Decile (F-layer)
- F-layer Maximum Usable Frequency
- E-layer Maximum Usable Frequency
- Optimum Working Frequency (F-layer)
- Absorption Limiting Frequency (D region)

Shown hourly are the highest frequency amateur bands in ranges between these key frequencies, when usable. The path, propagation mode and Australian terminal bearing are also given for each circuit.

These predictions were made with the Ionospheric Prediction Service program: ASAPS Version 4

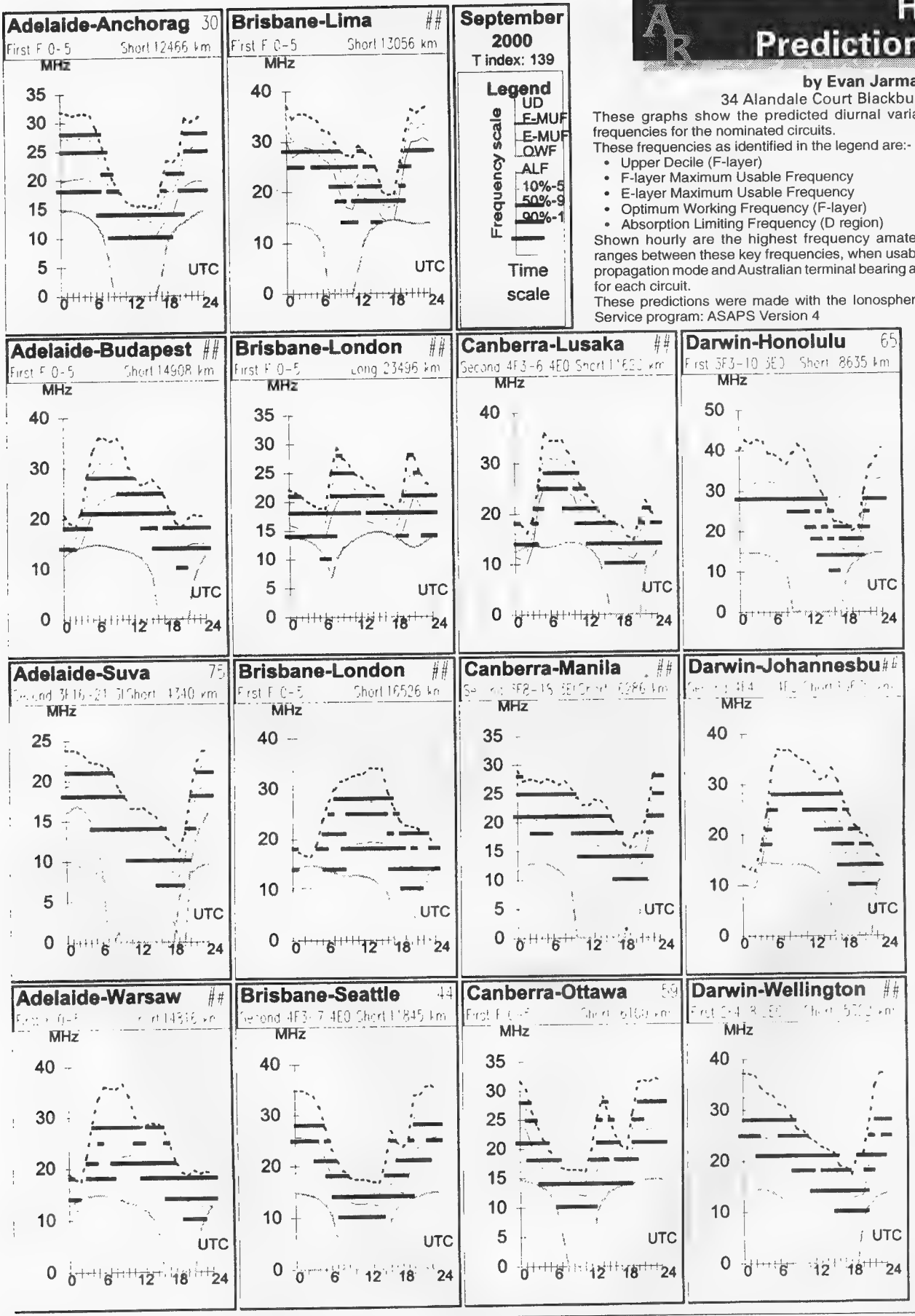

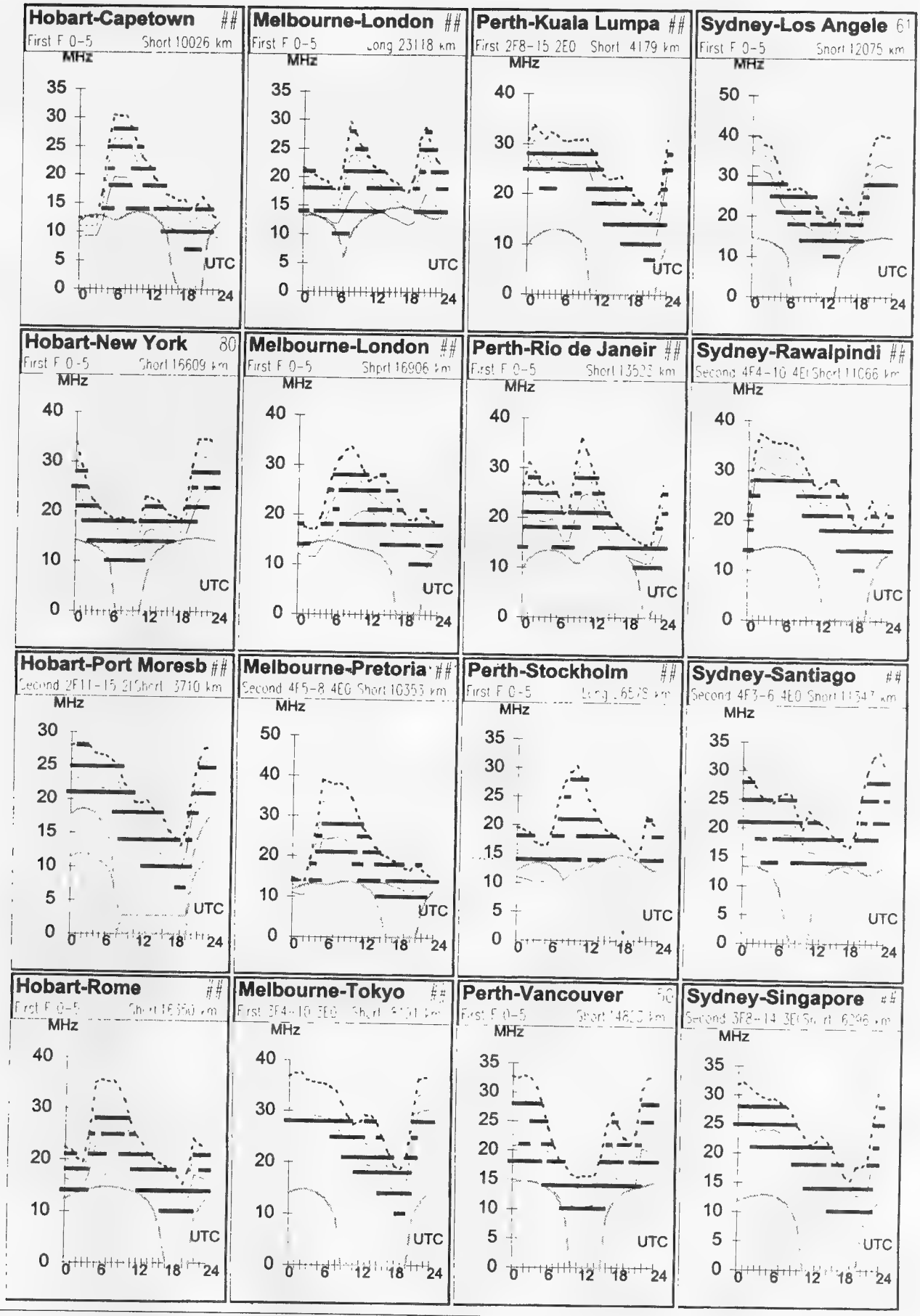
Hobart-Capetown ##
First F 0-5 Short 10026 km
Melbourne-London ##
First F 0-5 Long 23118 km
Perth-Kuala Lumpa ##
First 2F8-15 2E0 Short 4179 km
Sydney-Los Angele 61
First F 0-5 Short 12075 km
Hobart-New York 80
First F 0-5 Short 16609 km
Melbourne-London ##
First F 0-5 Short 16906 km
Perth-Rio de Janeir ##
First F 0-5 Short 13523 km
Sydney-Rawalpindi ##
Second 4F4-10 4E Short 11066 km
Hobart-Port Moresb ##
Second 2F11-15 2E Short 3710 km
Melbourne-Pretoria ##
Second 4F5-8 4E0 Short 10353 km
Perth-Stockholm ##
First F 0-5
Sydney-Santiago ##
Second 4F3-6 4E0 Short 11347 km
Hobart-Rome ##
First F 0-5
Melbourne-Tokyo ##
Perth-Vancouver 50
First F 0-5
Sydney-Singapore ##
Second 3F8-14 3E0 Short 6296 km
MHz
UTC
0 6 12 18 24

HAMADS

- Hamads may be submitted on the form on the reverse of your current Amateur Radio address flysheet. Please print carefully, especially where case or numerals are critical.
- Please submit separate forms for For Sale and Wanted items, and be sure to include your name, address and telephone number (including STD code) if you do not use the flysheet.
- Eight lines (forty words) per issue free to all WIA members, ninth and tenth lines for name and address. Commercial rates apply for non-members.
- Deceased estates Hamads will be published in full, even if the ad is not fully radio equipment.
- WIA policy recommends that the serial number of all equipment for sale should be included.
- QTHR means the address is correct in the current WIA Call Book.
- Ordinary Hamads from members who are deemed to be in general electronics retail and wholesale distributive trades should be certified as referring only to private articles not being re-sold for merchandising purposes.
- Commercial advertising (Trade Hamads) are pre-payable at $25.00 for four lines (twenty words), plus $2.25 per line (or part thereof), with a minimum charge of $25.00. Cheques are to be made out to: WIA Hamads.
- Copy should be typed or in block letters, and be received by the deadlines shown on page 1 of each issue of Amateur Radio, at:

Postal: *Newsletters Unlimited, 29 Tanner Street, Richmond, 3121*
Fax: *03 9428 4242* *E-mail: newsl@webtime.com.au*

Please only send your Hamad once

Please send Hamads by mail OR fax OR email (much preferred).

Please do not send by more than one method for any one ad or issue, it is confusing.

FOR SALE ACT

- Hewlett Packard test gear surplus to requirements.
- Signal Generators HP 606A 50 kHz to 65 MHz, HP 618C 3.6 GHz to 7.6 GHz. Also AN/URM 49 model TS 418A 400MHz to 1000 MHz. .For inquiries call Peter VK1CPK phone (02) 6231 1790 fax (02) 6296 5712"

FOR SALE NSW

- Yaseu FT101E with brand new NEC finals. $280. Midland 70324B 25w 2M FM mobile. $100. Maxon HR146 2M FM handheld. $150. Kenwood R1000 communications receiver. $350. Jim VK2ZVJ. (02) 4443 2277. Email. brownsarre@fastrac.net.au
- Yaesu 2m/70cm handheld FT50R with speaker mic, MH34 and SMA-BNC antenna adaptor. Bought new Feb this year, still under warranty. Total cost $550 will sell $400. Licensed amateurs only. Noel VK2BCA, QTHR. Tel (02) 4977 3449. email, ncherry@acay.com.au
- Oscilloscope sell or swap for suitcase radio, Army backpack, or old military radio. GOULD OS4200 Digital Storage CRO 500kHz, TEKTRONIX 5110 with NIC527 signal averager, TEKTRONIX 5110 storage CRO 1MHz. Ray Robinson VK2ILV Sydney (02) 9489 8561 robinson@shlrc.mq.edu.au
- Yaesu FT-707 HF Transceiver. Compact, solid state, 80-40-30-20-17-15-12-10m, 100w , manual, circuit diagram. Yaesu FV-707DM Digital External VFO. 12 Memory channels, Scanning. Yaesu YM-35 Scanning mike for FT707/FV707DM. Yaesu YM-34 Desk mike. $425. Neil VK2KCN QTHR (02) 98945678 neilcorp@one.net.au
- Kenwood TS-440S A/T HF Transceiver S/N 00110641, Kenwood TS-120V HF Transceiver S/N 0042009, Kenwood SP 180 Speakermatches TS-180, UNIDEN UBC9000XLT scanner, PALOMAR TX100PLUS linear amplifier 10-30 MHz, EMONA EAT301 ATU 300W, power supply 13.8V 20A., EST.VK2MFT. reas offers. Tony VK2BTS (02) 6642 3641 ajsmith@hotkey.net.au
- BOOK: "Radiotelegraph and Radiotelephone Codes, Prowords and Abbreviations." 2nd Edition. $16 posted Australia. 90 Pages. Q, X and Z codes, 97 Phonetic, 20 Morse Codes. Phillips, Myer, 10,11,12,13 Codes. Much other info. Internet http://www.nor.com.au/community/sarc/phonetic.htm VK2JWA, John W.Alcorn. QTHR. (02) 66215217. jalcorn@nor.com.au
- INTERNET Connect from Port Macquarie to the Gold Coast from 80cents per hour. Summerland Amateur Radio Club. For info - http://www.nor.com.au/community/sarc/sarc.htm - John, VK2JWA, QTHR, jalcorn@nor.com.au. 33 Spring St, Lismore, NSW, 2480. Ph (02) 6621 5217.
- Antenna rotator control cable, heavy gauge, multi-core, many uses. We got it at the right price can sell cheap, Goulburn Amateur Radio Society. Ring David VK2BDT (02) 4821 5036
- ALINCO DX70 bought Wyong this year no longer needed, manual, carton etc. David VK2BDT QTHR (02) 248215036 $1150.
- Linear amplifier HF 160m-10m Home-made copy from 1995 ARRL handbook 13.40. Separate high voltage power supply 3 Kilovolts at 1 Amp continuous using EIMAC 887 (3CX1500A7) high mu triode in grounded grid; amplifier, 1 year old $2950 VK2SUS QTHR (02) 9897 5440.
- FT7 transceiver modified to drive transvertors and linear amplifiers $250 N Chivers VK2YO QTHR (02) 6674 2095.
- ATV homemade transmitter 426,25 MHz - Motorola MHW 710/2 final - Approx. 5 watts output - Includes spare crystal for 444025 MHz - VGC - $ 120 - Home-made antenna 426 MHz, 12 elements $ 40 .- Peter VK2BPO - (02) 9713 1831 QTHR brunone@bigfoot.com

FOR SALE VIC

- Kenwood TS-811 70cm all-mode 25W out, power supply built in EC $900. Two Kenwood TS-711 2m all-modes 25W out, power supplies built in, one $750(EC), one $700(GC) All user and service manuals included, Two Kenwood SP-430 speakers $50 each. Richard VK3ZCL AH (03) 9729 1947
- DRAKE L75 600 Watt linear amplifier with spare 3-500 tube and manual $750 ono, also Yaesu monitor scope VO-100 $300 ono. Alf Chandler VK3LC QTHR or (03) 9773 5334
- Antenna 10/15 metre Duo band vertical gp as new never used $180 ono Michael VK3MRG AH (03) 9747 9342.

WANTED VIC

- Want a rural QTH? No TVI? One hour from Melbourne, RHOMBIC four wavelengths leg 20 Mx VHF UHF Yagis, seven acres, modern home, central heating, air conditioner, spa, solar heated pool, nice garden, large steel framed shed, near Nagambie $153,000. vk3amh@eck.net.au (03) 5794 2004. Early inquiries 0438 130 737.
- 1.825 MHz Crystal. Preferably HC6/U size. Phone Peter VK3YE (03) 9569 6751 (ah) or e-mail parkerp@alphalink.com.au
- Circuit & Layout of Palec Model VCT-2 (s/n 694) Multimeter Valve Tester made by Paton Electric Sydney. Information by .jpg to ghq@hyperlink.net.au or by post to W.R. Gronow 17 Walstab St. East Brighton Vic. 3187.
- Circuit manual for LO-KATA radio direction finder LW-MW-SW-DF made by Magnetic Components ltd, Falmouth Cornwall UK and circuit for Zenith modulated oscillator Model 512 (two valve circuit). Brian VK3WYN QTHR (03) 5664 1251.
- Valve type modulation transformer 60w or thereabouts multitap preferred. Don VK3ASD (03) 9849 0437.

FOR SALE QLD

- Copies of CB Action, Amateur Radio and Amateur Radio Action from late 1970's to date. Enquiries to Allan VK4VAT atomic@isisol.com.au Phone (07) 4127 1006
- TR7800 2M FM TX/RX $160 FT-726R 6M/2M/70cm base rig and satellite board, 10w O/P $700. PAKRATT PK-232 $160. SMPS NEC 13.8V 30A $160. Stainless Yagis 148 MHz 70cm crossed Yagi Peter VK4APD 17 Paxton St Holland Park QLD 4121 (07) 3397 3751.
- YAESU 101ZD with FM board 101DM Yaesu digital VFO FC901 antenna tuner $500 lot FL2100B linear AMP $400. (07) 4125 7167 VK4OH QTHR.
- HF FT107M $400 2m TXRX TR7800 $160 FT726R 2M/70cm satellite board $700 also

6M board $180 (both $850 neg) SMPS NEC 13.8V 30A $180. 148 MHz stainless Yagis 70cm crossed Yagi. Peter VK4APD QTHR (07) 3397 3751.

WANTED QLD

- ROTATOR. Ph. David 0741298296 email dm622@satcom.net.au

WANTED SA

- HF Mobile linear amplifier, 250 watts upwards, for 13.8 volt use. Any make considered with minimum range 3.5 - 30 MHz. Contact Kevin VK5KJ ph (08) 8725 9248, fax (08) 8723 9350 or vk5bcb@seol.net.au

WANTED TAS

- Philips PRM8025 or PRM8030 in 'A' band 146-174MHz. Brian VK7BW (03) 6229 5888 bwelch@southcom.com.au

MISCELLANEOUS

- If you got your licence before 1975, you are invited to join the Radio Amateurs Old Timers Club. A $2.50 joining fee plus $8.00 for one year or $15.00 for two years gets you two interesting Journals a year plus good fellowship. Arthur Evans VK3VQ or Allan Doble VK3AMD can supply application forms. Both are QTHR in any Call Book
- The WIA QSL Collection (now Federal) requires QSLs. All types welcome, especially rare DX pictorial cards, special issue. Please contact the Hon Curator, Ken Matchett VK3TL, 4 Sunrise Hill Road, Montrose Vic 3765, tel. (03) 9728 5350

PLEASE BE KIND TO OSCAR

Meet Mr Oscar Goldenboy, our Hamad typist

Oscar is not an expert in your field — he thinks Megahertz is what happens when he stubs his toe on a rock.

To help Oscar, please write your hamad legibly, using both capitals and lower case, and use legitimate abbreviations.

This will reduce the chance of errors being published, which incoveniences everyone.

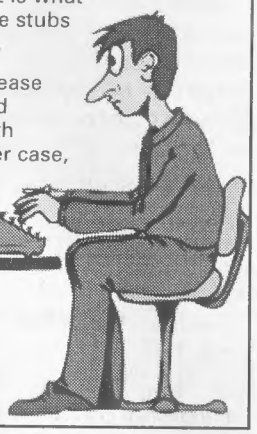

ADVERTISERS INDEX

Andrews Communication Systems 9
Dick Smith.....28, 29, OBC
Radio & Communications 25
Radio Theory Classes.....5
Tower Communications 27
WIA Call Book.....IFC

TRADE ADS

- **AMIDON FERROMAGNETIC CORES:**

For all RF applications. Send business size SASE for data/price to RJ & US Imports, PO Box 431, Kiama NSW 2533 (no enquiries at office please ... 14 Boanyo Ave Kiama). www.cyberelectric.net.au/~rjandusimports

Agencies at: Assoc TV Service, Hobart: Truscotts Electronic World, Melbourne and Mildura: Alpha Tango Products, Perth: Haven Electronics, Nowra

- WEATHER FAX programs for IBM XT/ATs *** "RADFAXZ" $35.00, is a high resolution short-wave weather fax, Morse and RTTY receiving program. Suitable for CGA, EGA, VGA and Hercules cards (state which). Needs SSB HF radio and RADFAX decoder. *** "SATFAX" $45.00, is a NOAA, Meteor and GMS weather satellite picture receiving program. Needs EGA or VGA & WEATHER FAX PC card, + 137 MHz Receiver. *** "MAXISAT" $75.00 is similar to SATFAX but needs 2 MB of expanded memory (EMS 3.6 or 4.0) and 1024 x 768 SVGA card. All programs are on 5.25" or 3.5" disks (state which) plus documentation, add $3.00 postage. ONLY from M. Delahunty, 42 Villers St, New Farm QLD 4005. Ph 07 358 2785.

- **Campervans** de ZL2QB. YL-2000 Meet in New Zealand. Campervans with ham radio for hire:

www.kiwicampervans.co.nz. Karen and Dieter, Nelson, NZ. Phone Fax 0064 3 543 2022, e-mail kiwicamper@ts.co.nz

http://www.hamsearch.com

a not-for-profit site that is a search engine for hams

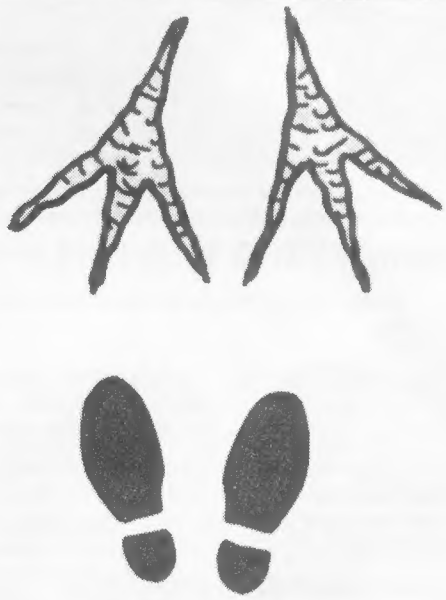

"What's your secret...how did you manage to get your antenna up so high by yourself?"

We LOVE emails

If you are emailing your Hamad, the method MUCH preferred by our typesetters, could you please assist by following these two guidelines:

1) Please use upper and lower case in normal text (not caps please)
2) Please enter the words directly into the body of the email

Have you heard this week's Divisional Broadcast?

See inside back cover for times and frequencies.

TRADE PRACTICES ACT

It is impossible for us to ensure that the advertisements submitted for publication comply with the Trade Practices Act 1974. Therefore, advertisers and advertising agents will appreciate the absolute need for themselves to ensure that the provisions of the Act are strictly complied with.

VICTORIAN CONSUMER AFFAIRS ACT

All advertisers are advised that advertisements containing only a PO Box number as the address cannot be accepted without the addition of the business address of the box-holder or seller of the goods.

Silent Key

Geoff Thompson VK3AC in his shack about 1975. Keyer bug and straight key under the rig, keyboard on the table at right

Geoff Thompson VK3AC 25.2.1911 — 30.4.2000

Geoffrey George Thompson passed away unexpectedly in his sleep on Sunday April 30.

Geoff was born at Clifton Hill where he attended the local school and, later, Collingwood Technical School and what was then known as the Working Men's College and is now RMIT University. At the age of 16 Geoff went to work at the Herald and Weekly Times as a copy boy. Many old timers will recall first reading about wireless and how to build their first crystal set by reading a wonderful boys' magazine, *Pals*, published by HWT until it was superseded by *The Listener In*.

As a schoolboy Geoff had passed through crystal set days and progressed to the point of obtaining his Amateur Licence in 1926, a little after his 16th birthday, with the call sign VK3GT which he held until the war years. He contributed many articles about wireless construction to *The Listener In* and also wrote a book, *The All Electric Receiver*, which was published by the Herald company in 1932. This was a time when AC operated receivers were beginning to replace battery operated sets.

Geoff combined his love of radio with photography and cinema photography and so became deeply involved with the newly formed Herald Cinesound company whose newsreels always preceded the main picture at theatres all over Australia. During this period he built and installed a base radio transmitter receiver combination and a matching battery operated combination to establish communication between head office and the mobile camera crew's cars. They were licenced as VHM and VHL. During this period he built and installed a state of the art broadcast receiver for his Managing Director, Keith Murdoch, father of Rupert.

Like others in his age group he was called up for compulsory military service at the age of 18 and served for about 2 years in the 57th Battalion until compulsory training was replaced by a voluntary system in November 1929. Soon after this, Geoff met the late Stewart Embling VK3DC who was the Captain in charge of the wireless section of 3rd Division Signals at South Melbourne and later, Albert Park. Embling persuaded Geoff to join 3rd Division Signals and this is where I met him after I transferred from the compulsory 1 year in infantry but still under the compulsory system. (3rd Division Signals was commanded by Colonel J S (Jack) Stevens who became Major General Sir Jack Stevens in World War 2).

As VK3GT Geoff operated on all bands and all modes and was always keen on CW. His life work was cinema photography. He was an accredited cinema photographer and war correspondent through both World War 2 and the Korean War including the occupation of Japan. His plan to form a business partnership with his friend the late, very famous photographer Damien Parer could not be fulfilled because of the tragic death of Damien Parer in New Guinea.

In 1946 Geoff came back to his first love, amateur radio, with the call sign VK3AC which he held until his passing. In the post war years he was an earlier operator in the SSB mode and delighted in high speed Morse code, gradually working up from hand held key and bug to keyboard operation in which he was an early operator. The machine in his shack was not connected, but a hand key and a keyer were wired into his rig.

Sadly, Geoff had to give up activity on the radio over the past 3 year or so because he had become profoundly deaf, but he retained his licence. After the war he had a holiday home at McCrae where he kept another set of equipment and also operated mobile. Geoff contributed a number of interesting articles to our magazine OTN, the most recent of which were in our March 1998 and March 2000 issues.

Geoff is survived by his wife of 60 years, Doreen and daughters Wendy and Sue. He deeply mourned the untimely death of his son Douglas in 1962. He was a long time member of the WIA and member number 12 of the Radio Amateurs Old Timers Club. He was widely know and admired throughout Australia and the wider world as a dedicated amateur who upheld the highest traditions of our hobby. He will be greatly missed.

Allan Doble VK3MD

ar

Division Directory

The Amateur Radio Service exists for the purpose of self training, intercommunication and technical investigation. It is carried out by amateurs who are duly authorised people interested in radio technique solely with a personal aim and without pecuniary interest.

The Wireless Institute of Australia represents the interests of all radio amateurs throughout Australia. National representation is handled by the executive office under council direction. One councillor for each of the seven Divisions. This directory lists all the Divisional offices, broadcasts schedules and subscription rates. All enquiries should be directed to your local Division.

VK1 Division Australian Capital Territory,
GPO Box 600, Canberra ACT 2601

President	Gilbert Hughes	VK1GH
Secretary	Peter Kloppenburg	VK1CPK
Treasurer	Ernie Hosking	VK1LK

VK2 Division News South Wales
109 Wigram St, Parramatta NSW
(PO Box 1066, Parramatta 2124)
(Office hours Mon-Fri 1100-1400)
Phone 02 9689 2417
Web: *http://www.ozemail.com.au/~vk2wi*
Freecall 1800 817 644
e-mail: *vk2wi@ozemail.com.au*
Fax 02 9633 1525

President	Michael Corbin	VK2YC
Secretary	Barry White	VK2AAB
Treasurer	Pat Leeper	VK2JPA

VK3 Division Victoria
40G Victory Boulevard Ashburton VIC 3147
(Office hours Tue & Thur 0930-1500)
Phone 03 9885 9261
Web: *http://www.tbsa.com.au/~wiavic/*
Fax 03 9885 9298
e-mail: *wiavic@alphalink.com.au*

President	Jim Linton	VK3PC
CEO	Barry Wilton	VK3XV
Secretary	Peter Mill	VK3APO

VK4 Division Queensland
GPO Box 638 Brisbane QLD 4001
Phone 07 3221 9377
e-mail: *office@wiaq.powerup.com.au*
Fax 07 3266 4929
Web: *http://www.wia.org.au/vk4*

President	Colin Gladstone	VK4ACG
Secretary	David Jones	VK4OF
Treasurer	Bill McDermott	VK4AZM
Office Mgr	John Stevens	VK4AFS

VK5 Division South Australia and Northern Territory
(GPO Box 1234 Adelaide SA 5001)
Phone 08 8294 2992
web:*http://www.sant.wia.org.au*

President	Jim McLachlan	VK5NB
Secretary	David Minchin	VK5KK
Treasurer	John Butler	VK5NX

VK6 Division Western Australia
PO Box 10 West Perth WA 6872
Phone 08 9351 8873
Web: *http://www.omen.net.au./~vk6wia/*
e-mail: *vk6wia@omen.net.au*

President	Neil Penfold	VK6NE
Secretary	Christine Bastin	VK6ZLZ
Treasurer	Bruce Hedland-Thomas	VK6OO

VK7 Division Tasmania
PO Box 371 Hobart TAS 7001
Phone 03 6233 3709 (BH)
Web: *http://www.wia.tasnet.net*
email: *batesjw@netspace.net.au*
Fax 03 6223 7816

President	Phil Corby	VK7ZAX
Secretary	John Bates	VK7RT
Treasurer	John Bates	VK7RT

Broadcast schedules

All frequencies MHz. All times are local.

VK1WI: 3.590 LSB, 146.950 FM each Sunday evening from 8.00pm local time. The broadcast text is available on packet, on Internet *aus.radio.amateur.misc* news group, and on the VK1 Home Page http://www.vk1.wia.ampr.org

Annual Membership Fees. Full $77.00 Pensioner or student $63.00. Without *Amateur Radio* $49.00

From VK2WI 1.845, 3.595, 7.146*, 10.125, 14.160, 24.950, 28.320, 29.120, 52.120, 52.525, 144.150, 147.000, 438.525, 1281.750 (* morning only) with relays to some of 18.120, 21.170, 584.750 ATV sound. Many country regions relay on 2 m or 70 cm repeaters. Sunday at 1000 and 1930. Highlights included in VK2AWX Newcastle news, Monday 1930 on 3.593 plus 10 m, 2 m, 70 cm, 23 cm. The broadcast text is available on the Internet newsgroup *aus.radio.amateur.misc*, and on packet radio.

Annual Membership Fees. Full $78.00 Pensioner or student $61.00. Without *Amateur Radio* $47.00

VK3BWI broadcasts on the 1st and 3rd Sunday of the month at 8.00pm. Primary frequencies, 3.615 LSB, 7.085 LSB, and FM(R)s VK3RML 146.700, VK3RMM 147.250, VK3RWG 147.225, and 70 cm FM(R)s VK3ROU 438.225, and VK3RMU 438.075. Major news under call VK3ZWI on Victorian packet BBS and WIA VIC Web Site.

Annual Membership Fees. Full $78.00 Pensioner or student $61.00. Without *Amateur Radio* $47.00

VK4WIA broadcasts on 1.825 MHz SSB, 3.605 MHz SSB, 7.118 MHz SSB, 10.135 MHz SSB, 14.342 MHz SSB, 21.175 MHz SSB, 28.400 MHz SSB, 29.660 MHz FM (rptr), 147.000 MHz, and 438.525 MHz (in the Brisbane region, and on regional VHF/UHF repeaters) at 0900 hrs K every Sunday morning. QNEWS is repeated Monday evenings, at 19.30 hrs K, on 3.605 MHz SSB and 147.000 MHz FM. On Sunday evenings, at 18.45 hrs K on 3.605SSB and 147.000 FM, a repeat of the previous week's edition of QNEWS is broadcast. Broadcast news in text form on packet is available under WIAQ@VKNET. QNEWS Text and real audio files available from the web site

Annual Membership Fees. Full $85.00 Pensioner or student $72.00. Without *Amateur Radio* $56.00

VK5WI: 1827 kHz AM, 3.550 MHz LSB, 7.095 AM, 14.175 USB, 28.470 USB, 53.100 FM, 147.000 FM Adelaide, 146.700 FM Mid North, 146.800 FM Mildura, 146.825 FM Barossa Valley, 146.900 FM South East, 146.925 FM Central North, 147.825 FM Gawler, 438.425 FM Barossa Valley, 438.475 FM Adelaide North, ATV Ch 35 579.250 Adelaide. (NT) 3.555 USB, 7.065 USB, 10.125 USB, 146.700 FM, 0900 hrs Sunday. 3.585 MHz and 146.675 MHz FM Adelaide, 1930 hrs Monday.

Annual Membership Fees. Full $77.00 Pensioner or student $63.00. Without *Amateur Radio* $49.00

VK6WIA: 146.700 FM(R) Perth at 0930hrs Sunday relayed on 1.865, 3.564, 7.075, 10.125, 14.116, 14.175, 21.185, 29.120 FM, 50.150 and 438.525 MHz, Country relays 3.582, 147.200 (R) Cataby, 147.350 (R) Busselton, 146.900 (R) Mt William (Bunbury).147.000 (R) Katanning and 147.250 (R) Mt Saddleback. Broadcast repeated on 146.700 at 1900 hrs Sunday relayed on 1.865, 3.564 and 438.525 MHz : country relays on 146.900,147.000, 147.200, 147.250 and 147.350 MHz..Also in "Real Audio" format from the VK6 WIA website

Annual Membership Fees. Full $69.00 Pensioner or student $59.00. Without *Amateur Radio* $38.00

VK7WI: 146.700 MHz FM (VK7RHT) at 0930 hrs Sunday relayed on 147.000 (VK7RAA), 146.725 (VK7RNE), 146.625 (VK7RMD), 3.570, 7.090, 14.130, 52.100, 144.150 (Hobart), repeated Tues 3.590 at 1930 hrs.

Annual Membership Fees. Full $88.00 Pensioner or student $75.00. Without *Amateur Radio* $55.00

VK8 Northern Territory (part of the VK5 Division and relays broadcasts from VK5 as shown, received on 14 or 28 MHz).

YAESU'S DONE IT AGAIN

VX-5R 6m/2m/70cm Deluxe Handheld

VX-5R pictured showing large frequency digits

SUPER PERFORMANCE HANDHELD

YAESU

2 YEAR WARRANTY

Tiny, yet incredibly rugged, the VX-5R provides 6m, 2m and 70cm Amateur band operation with 5W output as standard (4.5W on 70cm), made possible by a unique PA design, super high-capacity 7.2V 1100mA/H Lithium-ion battery, and a diecast metal case. Plus, ultra-wide VHF and UHF as well as medium-wave and shortwave reception facilities are provided.

Another really useful feature is the large backlit dot-matrix LCD screen that can be configured to suit your operating needs.
You can choose large frequency digits, dual line displays (VFO "A" and "B" frequencies, VFO "A" frequency and battery voltage and even VFO "A" frequency as well as other data such as recent Tx/Rx times or tranceiver internal temperature), or even 8-digit alphanumeric memory labels. All this in a diecast aluminium enclosure just 58 x 87 x 28mm WHD (w/o knob or antenna)!

Other features include:

- Tx: 50-54, 144-148, 430-450MHz
- Rx: 0.5-1.8MHz, 1.8-16MHz, 48-729MHz, 809-999MHz (cellular blocked)
- Full feature keypad, CTCSS encode/decode, Digital Code Sqelch
- Comprehensive menu system
- Over 200 regular memories, plus 10 pairs of "Band limit" memories
- Fast battery charging from the supplied AC adaptor
- 5 battery saving systems, plus Tx/Rx usage monitor.
- Spectra-Scope™ for monitoring adjacent channel activity
- Comes with FNB-58LI 1100mA/H Lithium-ion battery, flexible antenna and AC adaptor/charger

D 3670

$599 SAVE $60

Offers expire 29/10/00

DICK SMITH ELECTRONICS

For further information, orders, or the location of your nearest store: Phone 1300 366 644 (local call charge) Or Fax: (02) 9395 1155

1471 IBC col.

Print Post Approved PP349181/00420